SAFETY PRODUCTS

Magne 3 and Magne 4 Electromagnetic Process Lock

Product Manual



Read and understand this document

Please read and understand this document before using the products. Please consult your ABB Electrification Sweden representative if you have any questions or comments.

Suitablity for use

ABB shall not be responsible for conformity with any standards, codes, or regulations that apply to the combination of products in the customer's application or use of the product. Third party certificates for the products are available at https://new.abb.com/low-voltage/products/safety-products. This information by itself is not sufficient for a complete determination of the suitability of the products in combination with the end product, machine, system, or other application or use.

The following are some examples of applications for which particular attention must be given. This is not intended to be an exhaustive list of all possible uses of the products, nor is it intended to imply that the uses listed may be suitable for the products:

- Outdoor use, uses involving potential chemical contamination or electrical interference, or conditions or uses not described in this document.
- Nuclear energy control systems, combustion systems, railroad systems, aviation systems, medical equipment, amusement machines, vehicles, and installations subject to separate industry or government regulations.
- Systems, machines, and equipment that could present a risk to life or property.

Please know and observe all prohibitions of use applicable to the products.

NEVER USE THE PRODUCTS FOR AN APPLICATION INVOLVING SERIOUS RISK TO LIFE OR PROPERTY WITHOUT ENSURING THAT THE SYSTEM AS A WHOLE HAS BEEN DESIGNED TO ADDRESS THE RISKS, AND THAT THE ABB PRODUCT IS PROPERLY RATED AND INSTALLED FOR THE INTENDED USE WITHIN THE OVERALL EQUIPMENT OR SYSTEM.

Descriptions and examples show how the product works and can be used. It does not mean that it fulfills the requirements for all types of machines and processes. The buyer/user is responsible for installing and using the product according to applicable standards and regulations. We reserve the right to make changes to the product and the documentation without prior notice.

Table of Contents

1 Introduction 5
1.1 Purpose of document 5
1.2 Audience 5
1.3 Reading prerequisites 5
1.4 Special notes 5

2 Safety 6
2.1 Safety precautions 6

3 Product description 7
3.1 Magne 3 7
3.2 Magne 4 7
3.3 Accessories and parts 8

4 Installation 9
4.1 Installation precautions 9
4.2 Minimum safety distance 10
4.3 Installation instructions 10
4.3.1 Mounting kits 11
4.3.2 Installation on sliding door 12
4.3.3 Installation on hinged door 12
4.3.4 Installation Anchor plate 13
4.3.5 Positioning and orientation of Eva with Magne 4 14

5 Connections 16
5.1 Safety signal 16
5.2 Magne 3X 17
5.3 Magne 4X DYN 18
5.4 Magne 4 DYN-Info 19
5.5 Magne 4 DYN-2Info 20
5.6 Magne 4 OSSD-Info 21

6 Serial connections 22
6.1 Magne 4 DYN-Info and Pluto 22
6.2 Magne 4 DYN-2Info and Pluto 23
6.3 Magne 4 OSSD-Info and Pluto 23
6.4 Magne 4X DYN, Pluto and M12-3S 24
6.5 Magne 4 OSSD-info and Sentry 25
6.6 Magne 4 OSSD-Info, Sentry and M12-3G 25

7 Functions 26
7.1 Locking function 26
7.2 Interlocking function 26
7.3 LED Indications 26

8 Maintenance 27
8.1 Maintenance precautions 27

9 Troubleshooting 28
9.1 LED indications 28
9.2 Sensing distance Eva and Adam 28
9.3 Low or no holding force 29
9.4 Testing safety function 29
9.5 Replacing Eva unit 29

10 Model overview 31
10.1 Magne models 31
10.2 Accessories and spare parts 31
11 Dimensions 33
12 Technical data 35
13 EC Declaration of conformity 38

1 Introduction

1.1 Purpose of document

The purpose of this document is to describe the functions and to provide instructions for installation, operation, maintenance and troubleshooting of the product.

1.2 Audience

This document is intended for authorized personnel.

1.3 Reading prerequisites

It is assumed that the reader of this document has knowledge of the following:

- Basic knowledge of ABB safety products
- Knowledge of machine safety
- Knowledge of safety devices and process locks

1.4 Special notes

Pay attention to special notes in the document:

Warning! Danger of severe personal injury!
An instruction or procedure which, if not carried out correctly, may result in injury to the technician or other personnel.

Caution! Danger of damage to the equipment!
An instruction or procedure which, if not carried out correctly, may damage the equipment.

Note! Important or explanatory information.

2 Safety

2.1 Safety precautions

The safety precautions must be followed during installation, operation, maintenance and troubleshooting.

It is the responsibility of the user to ensure the correct overall functionality of its systems and machines.

⚠ **Warning!** Carefully read through the entire product manual before using the device.

⚠ **Warning!** The devices shall be installed by authorized personnel following the Safety regulations, standards and the Machinery directive.

⚠ **Warning!** Failure to comply with instructions, operation that is not in accordance with the use prescribed in the instructions, improper installation or handling of the device can affect the safety of people and the plant.

⚠ **Warning!** For installation and prescribed use of the product, the special notes in the instructions must be carefully observed and the technical standards relevant to the application must be considered.

⚠ **Warning!** In case of failure to comply with the instructions or standards, especially when tampering with and/or modifying the product, any liability is excluded.

3 Product description

Magne is an electromagnetic process lock that locks a door or a hatch and is intended for applications that are sensitive to unintentional or unnecessary interruptions.

Magne has a holding force of up to 1500 N.

Magne uses a M12 connector for power and connection with other safety devices.

There are several different Magne models. All of them must be used with an anchor plate. Magne 4 models also require an Eva actuator.

Magne can be installed on a door, preferably using an ABB mounting kit, available for sliding doors or hinged (conventional) doors. See chapter ‘Mounting kits’.

3.1 Magne 3

Magne 3 keeps a door locked. If used in safety applications, Magne 3 needs to be complemented with an external interlocking device.



3.2 Magne 4

Magne 4 keeps a door locked with integrated interlocking.

Magne 4 has an integrated Adam sensor which provides an interlocking function together with an Eva actuator.

The Eva actuator is ordered and installed separately. Eva is available with a general or a unique code.

Magne 4 is available with integrated Adam DYN (DYNlink signal) or Adam OSSD (OSSD signal) using M12 5-pole or M12 8-pole connector.



3.3 Accessories and parts

A standard Magne installation includes a Magne, an anchor plate and, with Magne 4, an Eva actuator. Anchor plate and Eva actuator are ordered separately. Several accessories are available. See chapter ‘Model overview’ for ordering codes and further details.

Anchor plate must be ordered with every Magne.

Anchor plates are delivered with a cellular rubber. Anchor plate 32E has an integrated permanent magnet. It holds the door closed with a force of approximately 30 N when the power to Magne is disconnected. Anchor plate 32D is without a magnet.

Eva actuator must be ordered with every Magne 4.

Eva units with general code all have the same code and fulfill the requirement for a low-level coded interlocking device according to EN ISO 14119:2013.

Eva units with unique code all have a different unique code and fulfill the requirements for a high-level coded interlocking device according to EN ISO 14119:2013.

Accessories for connection in series

Y-connectors and other accessories are available to facilitate connection in series.



Anchor plate



Cellular rubber



Eva actuator



Y-connector

4 Installation

Installation shall be done in accordance with a risk assessment for the individual application. Installation shall be carried out by authorized personnel and in accordance with instructions in this document.

Please read and understand Magne and Eden product manuals before starting.

4.1 Installation precautions

Warning! All safety functions shall be tested before starting up the system.

Warning! Follow the instructions carefully to avoid personal injury or damage to the device.

Warning! Do not defeat, tamper or bypass the safety function. Failure can result in death or serious injury.

Warning! The M12 connector shall be connected after Magne has been installed on the intended surface.

Caution! It is important that Eva is correctly positioned and oriented in relation to the integrated Adam sensor in Magne 4. See chapter ‘Positioning and orientation of Eva with Magne 4’.

Caution! Magne shall be installed as close to the door handle as possible. The distance between the lock and the handle creates a lever effect, reducing the holding force. The bigger the distance, the greater the risk of the anchor plate not being parallel and aligned with the electromagnet, which significantly reduces the holding force.

Caution! Magne 4 shall be connected to the power supply after the door is closed and when Eva is within sensing distance of Adam.

Caution! After installation, check the locking function and that the surfaces of the magnet and the anchor plate are parallel, i.e. that full contact is obtained when the door is closed. If the anchor plate tilts, the holding force of the lock can be significantly reduced or eliminated.

4.2 Minimum safety distance

When using interlocking guards without guard locking to safeguard a hazard zone, the minimum allowed safety distance between the guarded opening and the hazardous machine must be calculated.

In order to ensure that the hazardous machine motion will be stopped before it can be reached, the minimum safety distance is calculated according to EN ISO 13855: 2010 (“Positioning of safeguards with respect to the approach speeds of parts of the human body”).

The minimum safety distance is calculated according to the formula:

S = (K x T) + C

Where:

S = minimum safety distance (mm)

K = approach speed of a human body (1600 mm/s)

T = the total time from opening of the guard until the hazardous machine movement has stopped, including control system reaction times and other delays (seconds)

C = a safety distance (mm) taken from Table 4 or Table 5 of EN ISO 13857:2008; if it is possible to push fingers or a hand through the opening towards the hazard before a stop signal is generated.

Note! In some cases, T might be reduced by the opening time of the guard until the opening size permits access of the relevant parts of the body. Refer to EN ISO 13855:2010 for further details and EN ISO 13857:2008 for specified values.

4.3 Installation instructions

1. Install Magne and accessories as close to the door handle as possible. Use relevant mounting kit and follow the installation guide included in the kit (see chapter ‘Mounting kits’).
2. Calibrate the position of the anchor plate with Magne according to chapter ‘Anchor plate installation’.
3. Make sure Eva is correctly positioned and oriented in relation to the integrated Adam sensor in Magne 4 (see chapter ‘Positioning and orientation of Eva with Magne 4’).
4. Connect the pin out according to chapter ‘Connections’.
5. Connect the M12 connector to Magne.

Note! Make sure no power supply is connected when cable is fitted to the Magne M12 pin out.

6. Close the door to put Eva within sensing distance of Adam.
7. Connect Magne to the power supply and turn power on.

Note! Only connect Magne to power supply when Eva is within sensing distance. The integrated Adam sensor in Magne 4 needs to learn the Eva code.

For Magne 3 the blue LED will illuminate with a solid light when connected.
For Magne 4 the green LED will illuminate with a solid light. The blue LED will illuminate with a solid light when the locking signal is activated.

8. After installation, check the locking function.

4.3.1 Mounting kits

To achieve proper fitting, it is recommended to use available mounting kits on installation.

The mounting kits include a separate installation guide and screws and nuts necessary to install Magne on ABB Quick-Guard © fencing system.

Note! Magne, Eva, anchor plate and cellular rubber are not included in the mounting kits and need to be ordered separately. See chapter ‘Model overview’.

Read and follow the separate instructions included in each mounting kit package:

- JSM D23C: Mounting kit for Magne on sliding door.
- JSM D28: Aluminum profile used as door handle for Magne on hinged door.
- JSM D21C: Mounting kit for Magne on hinged door.
- JSM D24: Mounting kit for Eva on hinged door. Often used with JSM D21C.

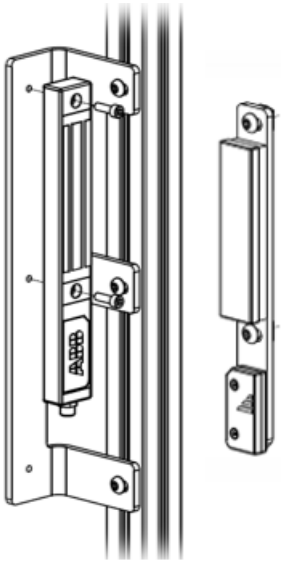

JSM D23C

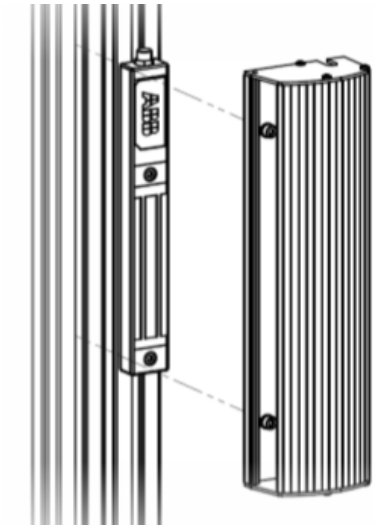

JSM D28

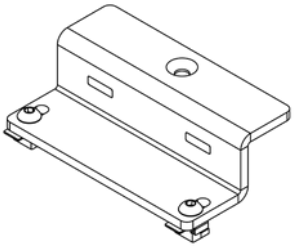

JSM D21C

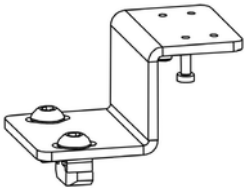

JSM D24

4.3.2 Installation on sliding door

JSM D23C Mounting kit is recommended for use on sliding doors. Designed for use on both right and left opened doors.

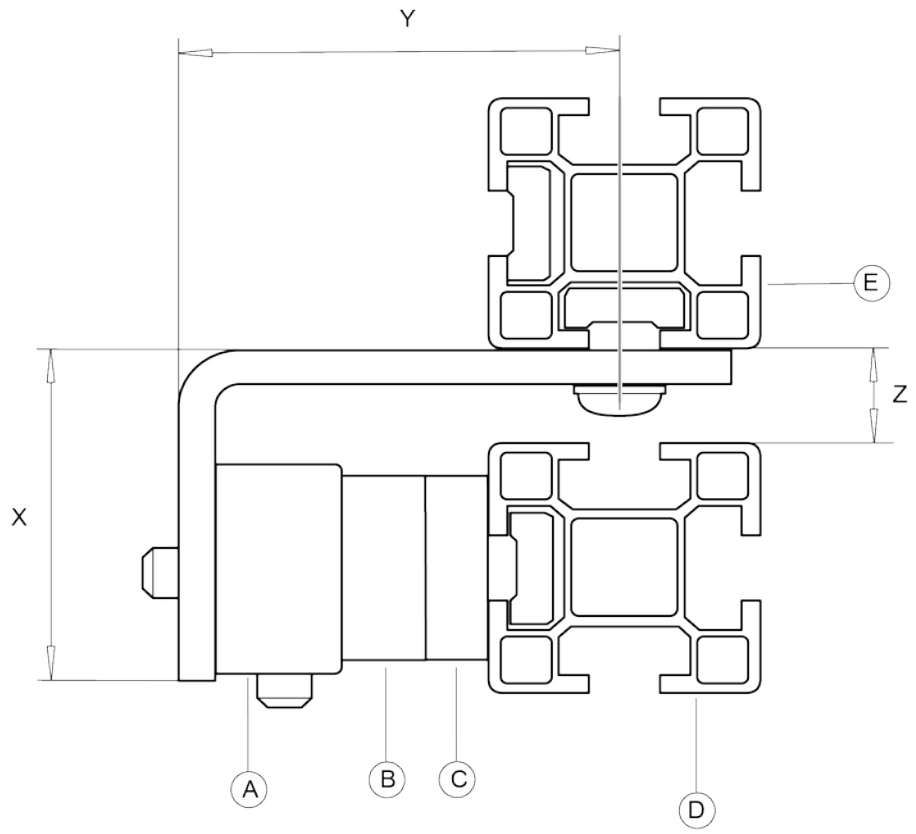

Installation tolerances for Magne and JSM D23C on a sliding door:

Ref	Part	Ref	Distance
A	Magne	X	60 mm
B	Anchor plate	Y	69 mm ±5
C	Cellular rubber	Z	18 mm ±5
D	Sliding door		
E	Fence		

4.3.3 Installation on hinged door

JSM D28 is a handle profile in aluminum for Magne 3 and Magne 4 to be used on hinged doors. Designed for doors with a minimum opening radius of 200 mm.

JSM D21C and JSM D24 mounting kits are designed for hinged doors with 5-15 mm door gap.

Holding force at door handle

The Magne unit can support a holding force of up to 1500 N depending on installation.

When the Magne unit is mounted on a hinged door, the force needed at the handle to open the door might be reduced. The possible reduction of the holding force is depending on the offset between the Magne unit and the door handle, according to graph below.

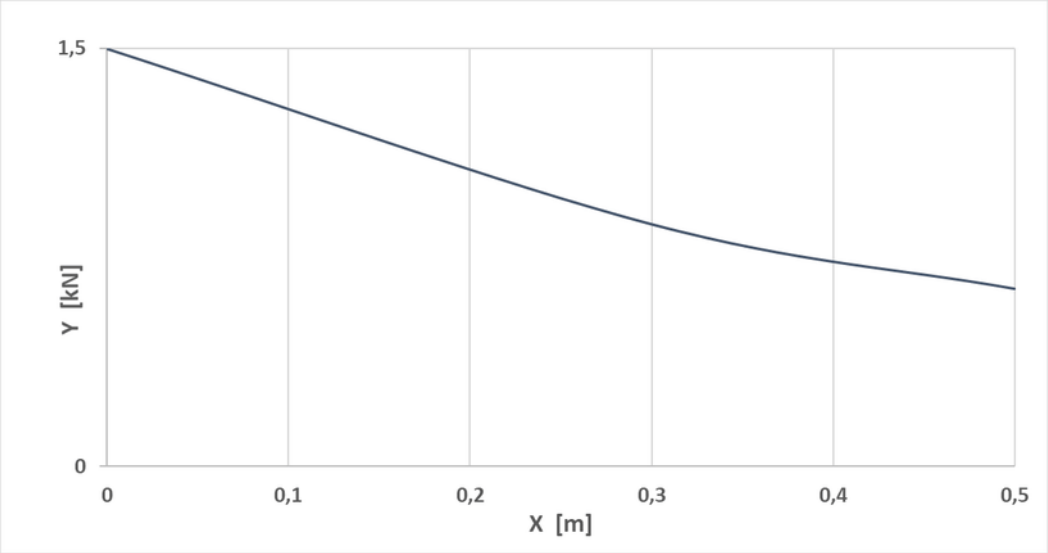

Axle	Holding force at door handle
Y	Holding force (kN)
X	Offset between Magne unit and door handle (m)

4.3.4 Installation Anchor plate

Anchor plate (B) is installed with cellular rubber (C) between the anchor plate and the bracket (G) mounted on the door. The cellular rubber is attached to the anchor plate with adhesive tape and enables the anchor plate to adjust to Magne.

Use suitable M8 screw (F). Leave enough room for the cellular rubber to ensure movement of the anchor plate.

Recommended tightening torque is 7 Nm ±2.

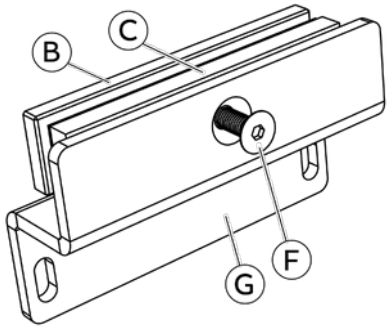

Note! Do not compress the cellular rubber to a thickness less than 8 mm.

Do not overtighten the screw. This can deform the anchor plate, causing reduced or no holding force. A deformed anchor plate must be replaced.

Make sure the surfaces of the electromagnet (A) and the anchor plate (B) are completely parallel, i.e. that full contact is obtained when the door is closed. If ABB mounting accessories are not used, make sure the anchor plate cannot rotate. If the anchor plate tilts, the holding force of the lock can be significantly reduced or eliminated.

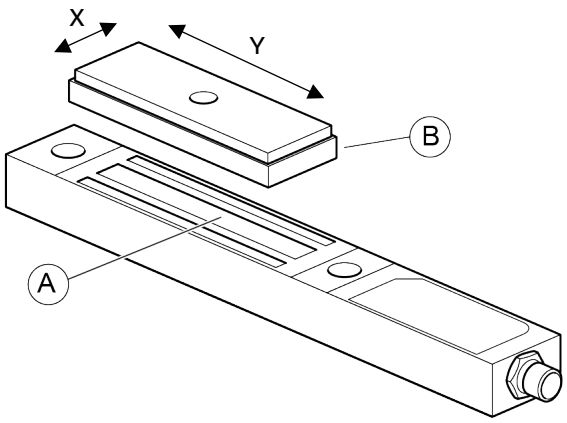

Installation tolerances between Magne and anchor plate:

Ref	Part	Ref	Distance
A	Magne electromagnet	X	±3 mm sideways
B	Anchor plate	Y	±5 mm lengthways

Note! To achieve maximum holding force the anchor plate must be installed completely parallel to Magne.

4.3.5 Positioning and orientation of Eva with Magne 4

The safety functionality of Magne 4 is based on the integrated Adam sensor and the Eva actuator.

Eva unit (A) must be correctly positioned above the yellow cover on Magne/Adam (B) when the door is closed.

Note! For the sensor to work as intended it is very important that the units are correctly positioned and that the safety functions are tested.

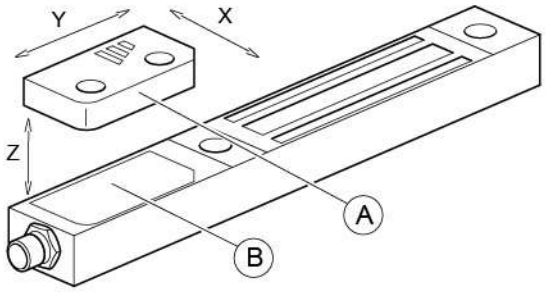

Positioning tolerances for Eva and integrated Adam in Magne 4:

Ref	Part	Ref	Distance
A	Eva	X	±5 mm sideways
B	Adam	Y	±5 mm lengthways
		Z	2-7 mm

To decrease distance Z, install distance plate (DA 1B) between the Eva unit and the bracket holding Eva.

5 Connections

Connection diagrams with pin outs for different Magne models.

Warning! Always use shielded cables to connect the unit to the rest of the safety circuit.

5.1 Safety signal

DYNlink signal – one channel

Magne DYN models use the ABB DYNlink signal as safety signal and must be used with ABB Vital safety controller and/or ABB Pluto safety PLC.

All products using the DYNlink signal can be mixed and connected in series. Up to 30 DYNlink devices with a Vital and up to 10 DYNlink devices per Pluto input can be connected while maintaining PL e (EN ISO 13849-1:2015).

OSSD signal – two channels

Magne OSSD (Output Signal Switching Devices) models can be used with any safety control module that can handle OSSD signals. Up to 30 Magne OSSD can be connected in series while maintaining PL e (EN ISO 13849-1:2015).

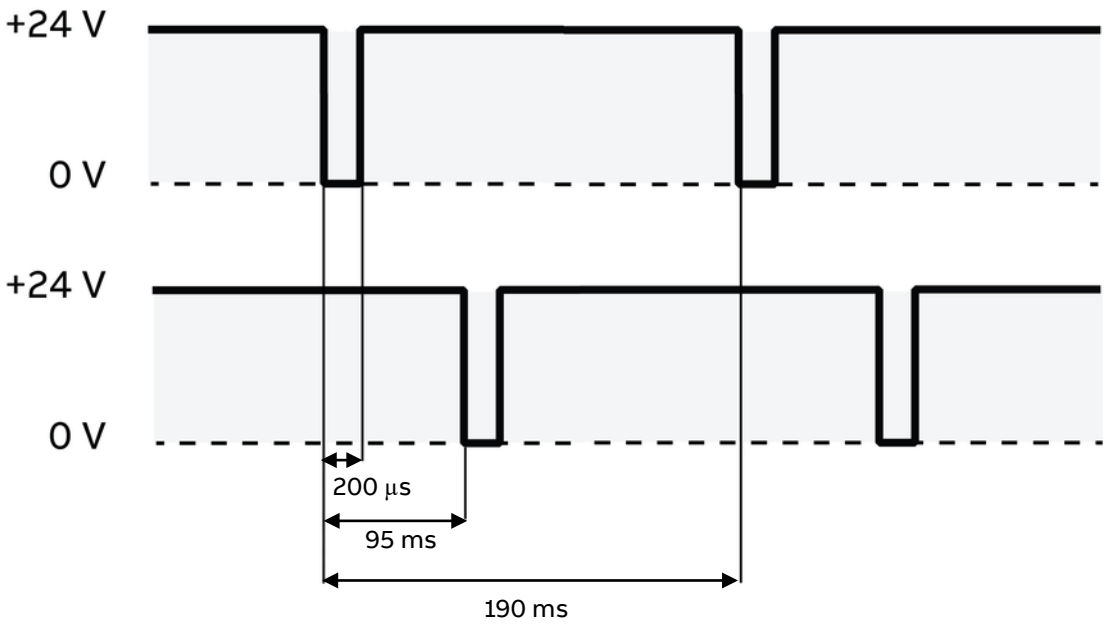

5.2 Magne 3X

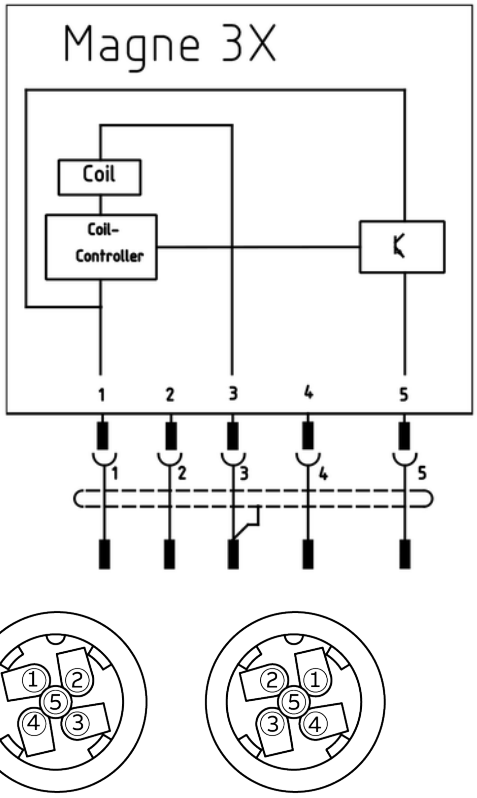

Male and female M12 5-pole connectors seen from cable side.

M12 5-pole connector		
1	Brown	Locking signal +24 VDC
2	White	Not used
3	Blue	0 V
4	Black	Not used
5	Grey	Info output, locked

Warning! The info output is non-failsafe and shall **never** be used to control a safety application.

Note! Several Magne 3X units can be connected using a M12-3A Y-connector, but the info-signal will not be available.

5.3 Magne 4X DYN

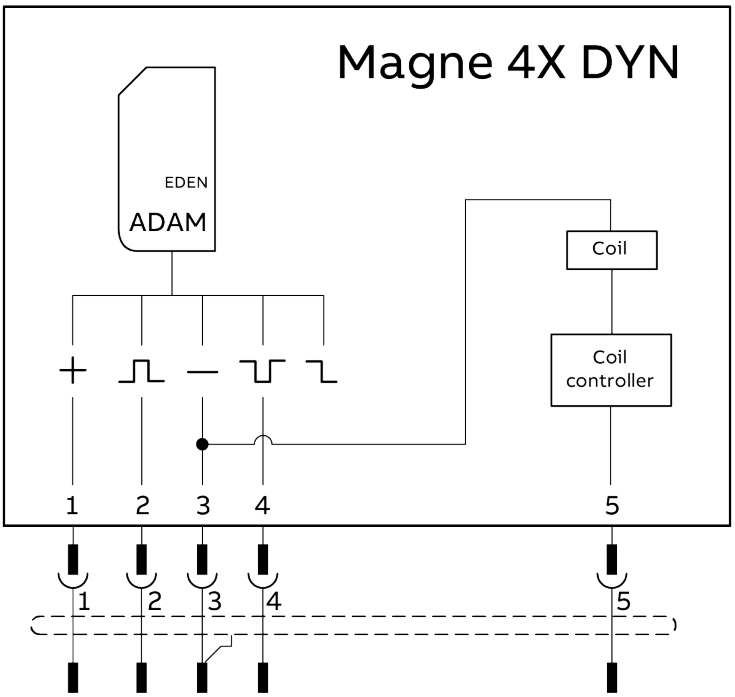

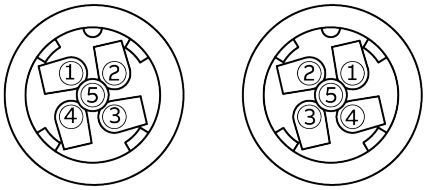

Male and female M12 5-pole connectors seen from cable side.

M12 5-pole connector		
1	Brown	+24 VDC
2	White	DYNlink signal in
3	Blue	0 V
4	Black	DYNlink signal out
5	Grey	Locking signal +24 VDC

Warning! The DYNlink signal is used to control the safety application.

Note! Several Magne 4X DYN units can be connected using a M12-3S Y-connector.

5.4 Magne 4 DYN-Info

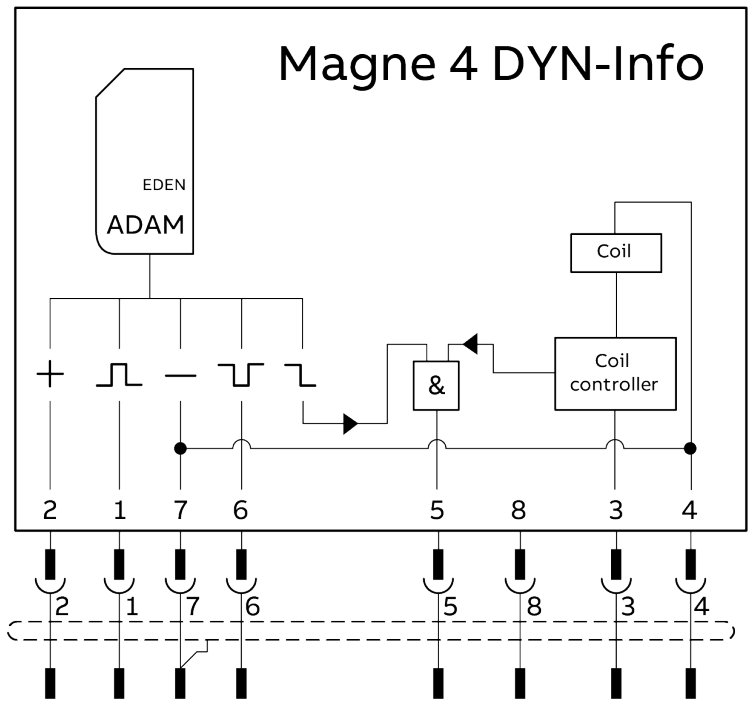

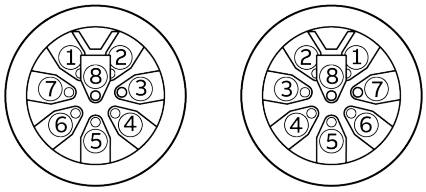

Male and female M12 8-pole connectors seen from cable side.

M12 8-pole connector		
1	White	DYNlink signal in
2	Brown	+24 VDC
3	Green	Locking signal +24 VDC
4	Yellow	0 V
5	Grey	Info output (Adam and Eva closed & Magne locked)
6	Pink	DYNlink signal out
7	Blue	0 V
8	Red	Not used

Warning! The info output is non-failsafe and shall **never** be used to control a safety application.

Warning! The DYNlink signal is used to control the safety application.

5.5 Magne 4 DYN-2Info

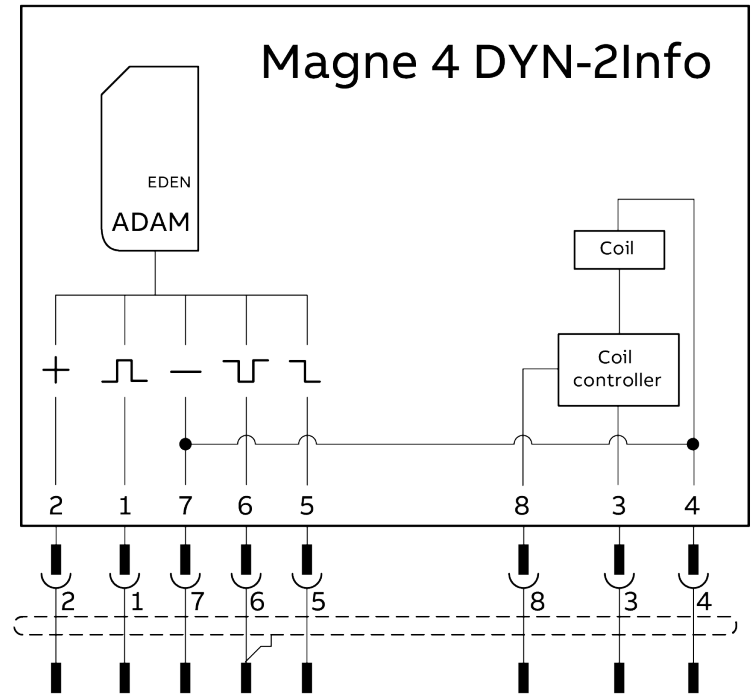

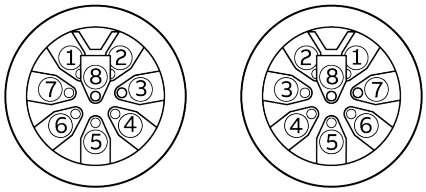

Male and female M12 8-pole connectors seen from cable side.

M12 8-pole connector		
1	White	DYNlink signal in
2	Brown	+24 VDC
3	Green	Locking signal +24 VDC
4	Yellow	0 V
5	Grey	Info output (Adam and Eva closed)
6	Pink	DYNlink signal out
7	Blue	0 V
8	Red	Info output (Locked)

Warning! The info output is non-failsafe and shall never be used to control a safety application.

Warning! The DYNlink signal is used to control the safety application.

5.6 Magne 4 OSSD-Info

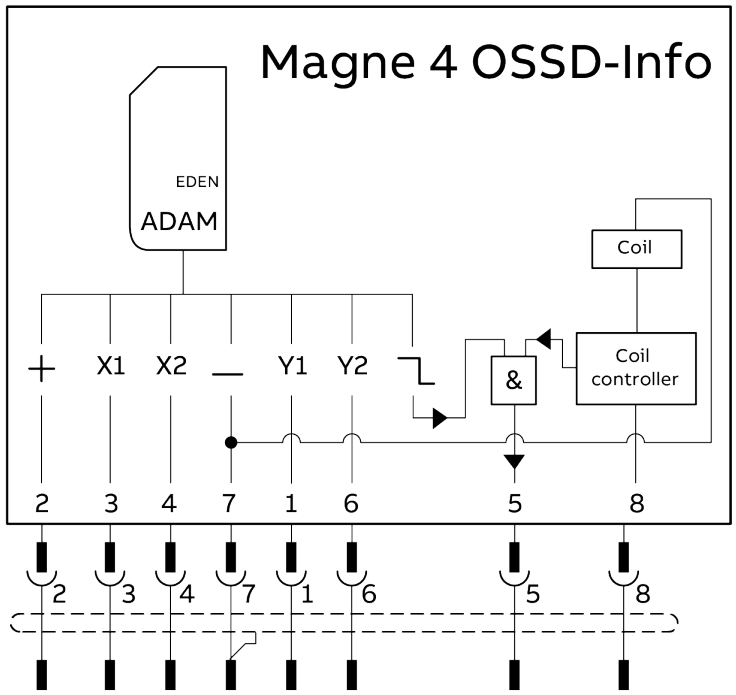

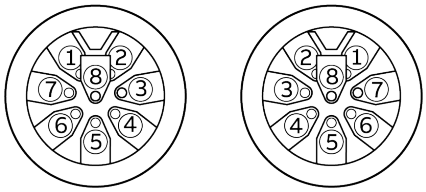

Male and female M12 8-pole connectors seen from cable side.

M12 8-pole connector		
1	White	OSSD1 out
2	Brown	+24 VDC
3	Green	OSSD1 in (+24 VDC for the first device after the safety control unit)
4	Yellow	OSSD2 in (+24 VDC for the first device after the safety control unit)
5	Grey	Info output (Adam and Eva closed & Magne locked)
6	Pink	OSSD2 out
7	Blue	0 V
8	Red	Locking signal +24 VDC

Warning! The info output is non-failsafe and shall never be used to control a safety application.

Warning! The safe OSSD signals are used to control the safety application.

Note! Several Magne OSSD-Info units can be connected using a M12-3G Y-connector, but the info-signal will not be available.

6 Serial connections

To install the safety circuit in a correct way, follow relevant examples of serial connections below.

Magne 4 can be connected in series. It is not possible to combine OSSD and DYNlink signals in a safety circuit.

If only one OSSD device is used, or if Magne 4 OSSD is the first unit in the series, +24 VDC must be connected to OSSD1 In and OSSD2 In. Otherwise the OSSD output signals will not be generated from Magne.

6.1 Magne 4 DYN-Info and Pluto

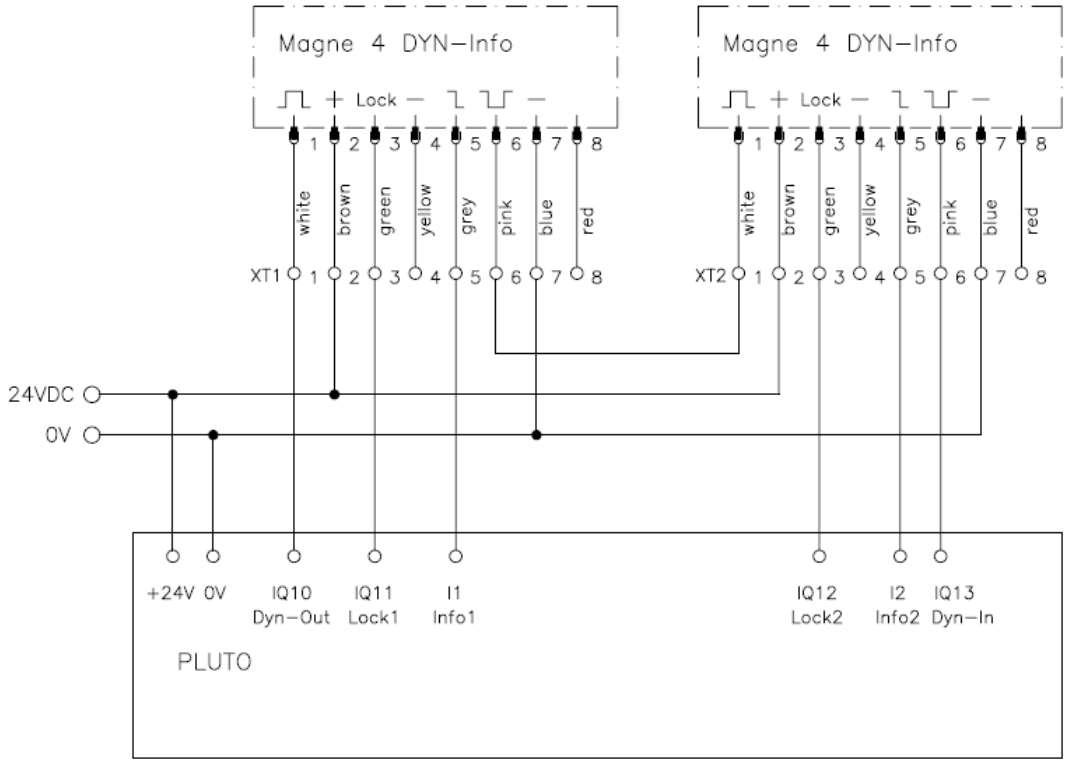

Magne 4 DYN-Info and Pluto (Drawing ID: 2TLC010021T0005)

6.2 Magne 4 DYN-2Info and Pluto

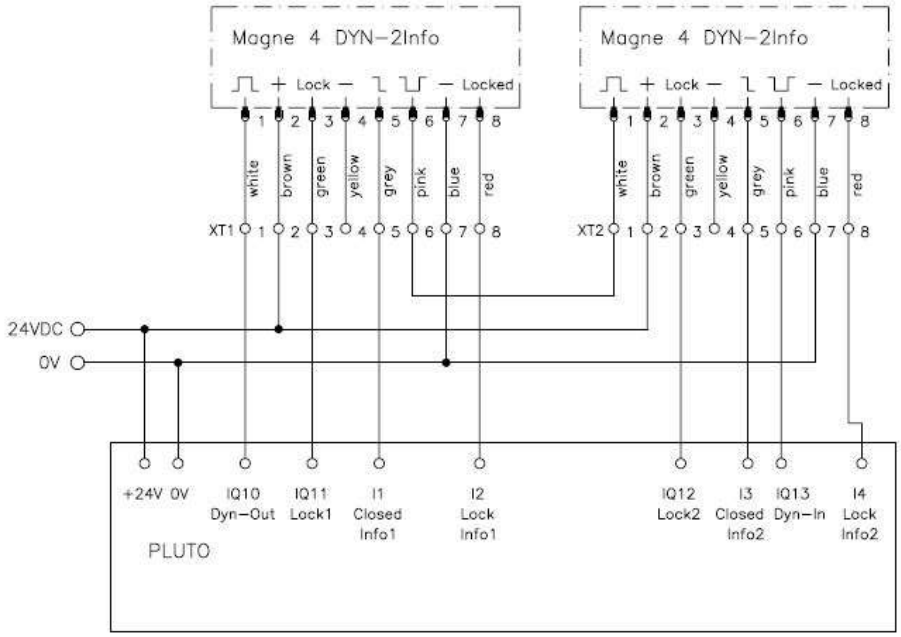

Magne 4 DYN-2Info and Pluto (Drawing ID: 2TLC010021T0006)

6.3 Magne 4 OSSD-Info and Pluto

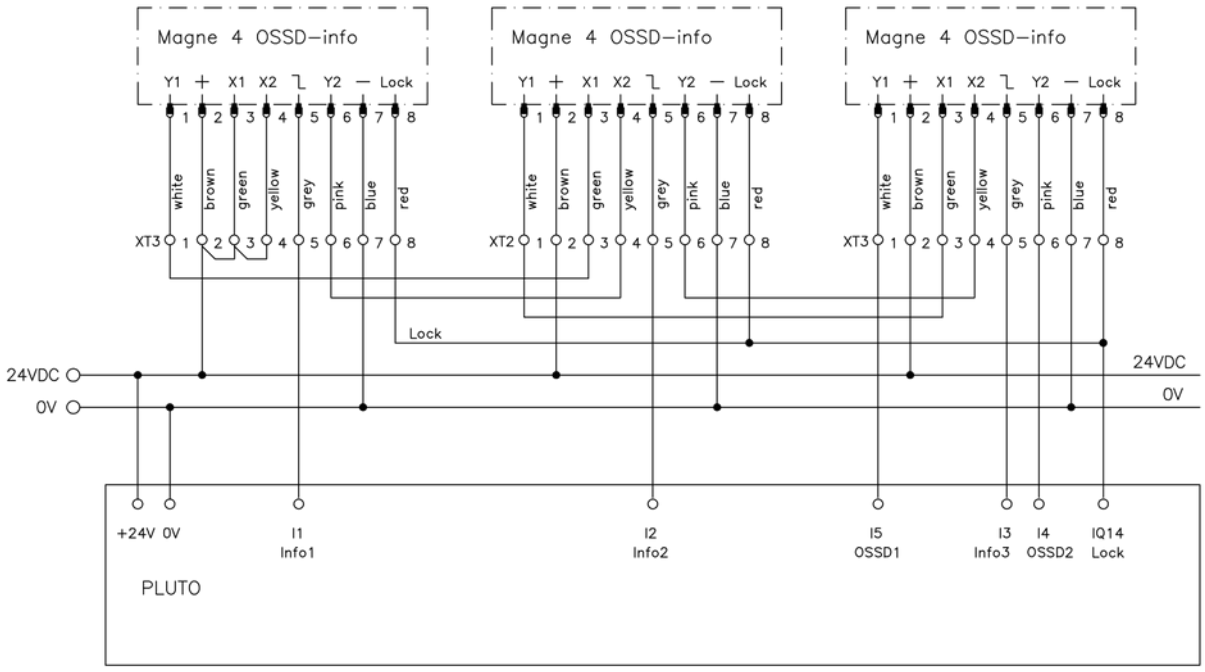

Magne 4 OSSD and Pluto (Drawing ID: 2TLC010021T0003)

6.4 Magne 4X DYN, Pluto and M12-3S

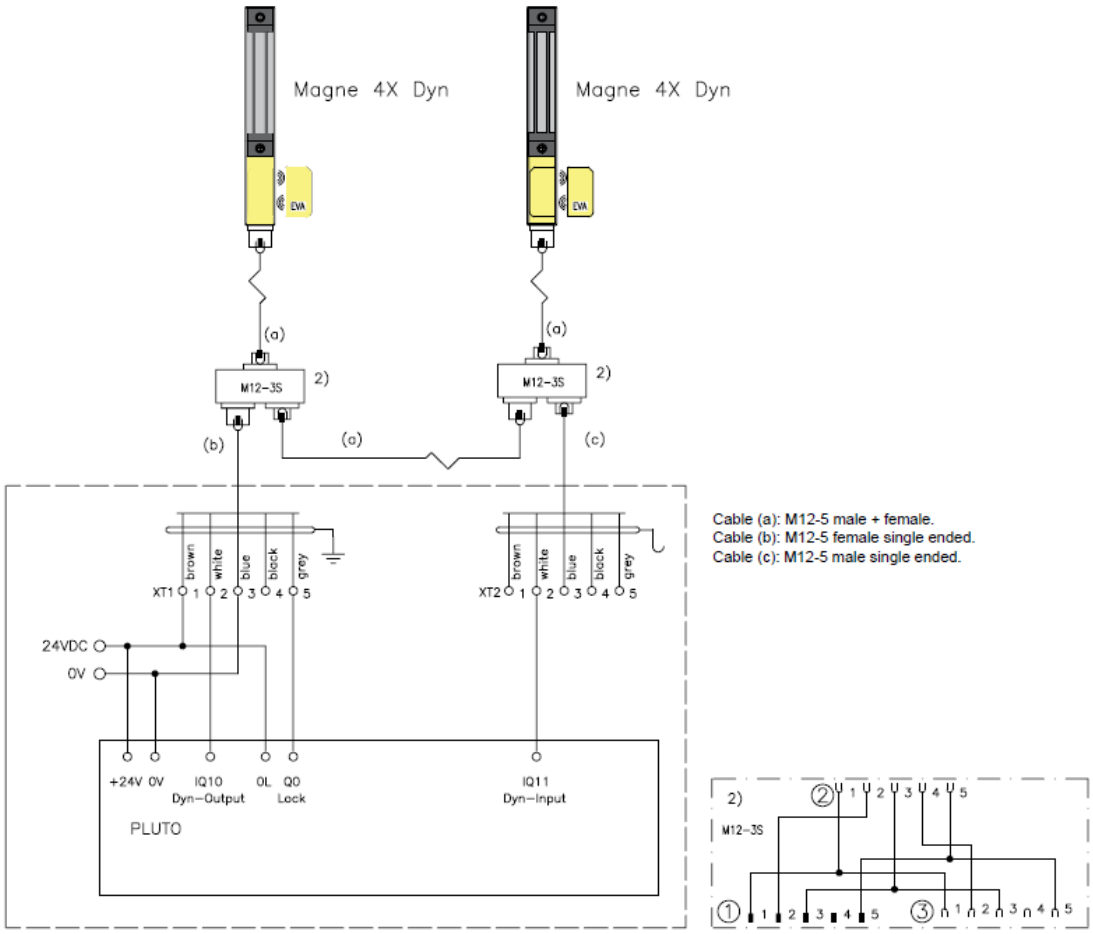

Magne 4X DYN, Pluto and M12-3S (Drawing ID: 2TLC010021T0004)

6.5 Magne 4 OSSD-info and Sentry

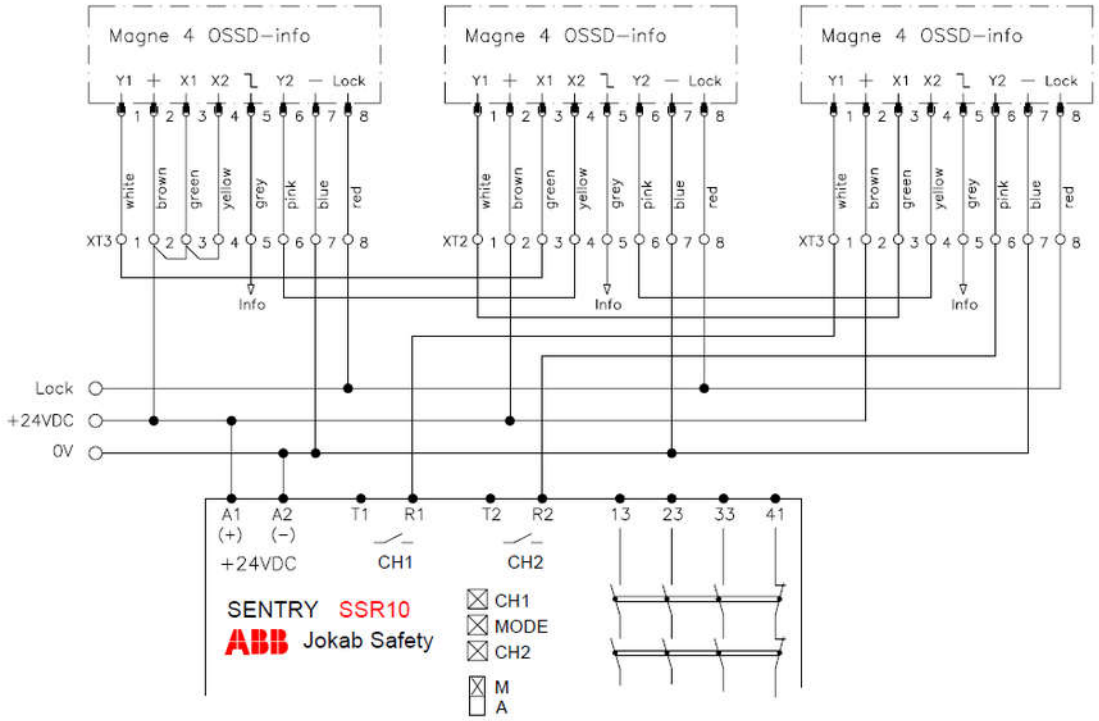

Magne OSSD and Sentry (Drawing ID: 2TLC010021T0002)

6.6 Magne 4 OSSD-Info, Sentry and M12-3G

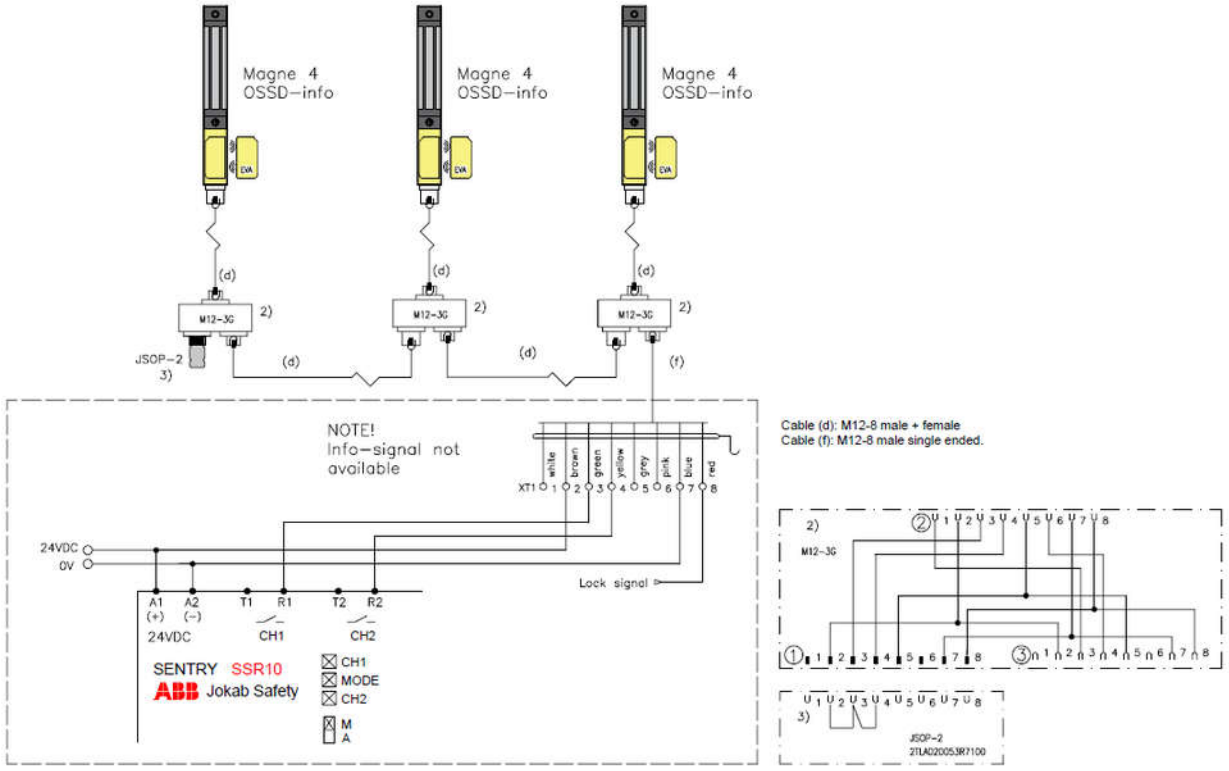

Magne OSSD Sentry and M12-3G (Drawing ID: 2TLC010021T0001)

7 Functions

7.1 Locking function

Power is needed to lock Magne. A loss of power will result in unlocking.

Locking:

- Close the door.
- Lock by applying +24 VDC on the locking pin.

Unlocking:

- Unlock by removing +24 VDC from the locking pin.
- Open the door.

7.2 Interlocking function

An interlocking function monitors the door position, open or closed, but it does not prevent the door from being opened.

7.3 LED Indications

Status LED indications show the status of Magne and its outputs.
Magne 3 and Magne 4 have one blue LED (locked/unlocked indicator).
Magne 4 also has one green and one red LED (Eva position indicator).

Model	LED Indication	Description	Safety circuit
Magne 3 + Magne 4	Blue	Magne is locked	N/A
Magne 3 + Magne 4	Blue flashing	Lock signal, but Magne is not detecting the anchor plate	N/A
Magne 4	Green	Eva within sensing distance of Adam (door closed)	Closed
Magne 4	Green flashing	Eva within 2 mm from maximum sensing distance (door closed)	Closed
Magne 4	Green-Red flashing	Eva within sensing distance, safety circuit before this unit broken (door closed)	Open
Magne 4	Red	Eva out of sensing distance (door open)	Open
Magne 4	Red flashing	Eva code not stored in Adam	Open
Magne 4	Red fast flashing	Fail safe mode	Open
Magne 4 (OSSD)	Red-Red-Green fast flashing	Invalid input signal	Open

See recommended actions to take in chapter ‘Troubleshooting’.

8 Maintenance

Maintenance shall be done in accordance with a risk assessment for the individual application.

8.1 Maintenance precautions

Warning! The safety functions and the mechanics shall be tested regularly. Check correct operation of all circuits and the locking function at least once a year. If any part of the product displays mechanical damage, remove and replace it. (EN ISO 13849-1:2015/EN 62061:2005+A1:2012+A2: 2015)

Warning! A defective unit shall be replaced with a new unit. Never bypass the safety circuit.

Warning! In case of breakdown or damage to the product, contact nearest ABB Electrification Sweden service office or reseller. Do not try to repair the product yourself, since it may accidentally cause permanent damage to the product. That may impair the safety of the device, which could lead to serious injury to personnel.

Warning! ABB will not accept responsibility for failure of the switch functions if the installation and maintenance requirements shown in this document are not implemented. These requirements form part of the product warranty.

Caution! The electromagnet shall be regularly cleaned to maintain its full holding force. Dirt or dust on the anchor plate or Magne can cause low or no holding force.

9 Troubleshooting

9.1 LED indications

Magne 3 and Magne 4 LED Indications:

LED indication	Probable cause	Action
No LED light	No voltage	Check +24 VDC power supply.
Blue flashing	Anchor plate is missing or not centered	Check anchor plate position.

Magne 4 LED indications:

LED indication	Probable cause	Action
Green flashing	Eva within 2 mm from maximum sensing distance	Adjust Eva position.
Red solid light	Eva out of sensing distance, safety circuit broken (door open)	Move Eva within sensing distance of Adam (close door).
	Metal between Adam and Eva	Remove metal.
Green and Red at the same time	Unit is defective	Replace the unit.
Green-Red fast flashing	Valid Eva code missing	Perform procedure to replace Eva. If fault indication remains, the unit is defective and must be replaced.
Red fast flashing	Fail safe mode	Power cycle (i.e. turn off power, wait for one minute and turn it on again).
Green-Red flashing	Input signal is missing	1. Check output signal from the previous unit in the signal chain. 2. Turn off power supply. 3. Move Eva within sensing distance of Adam. 4. Power supply.
Red-Red-Green fast flashing (OSSD only)	Invalid input signal	Power cycle (i.e. turn off power, wait for one minute and turn it on again). If fault indication remains, check incoming signals.

9.2 Sensing distance Eva and Adam

To improve the sensing performance between Eva and Adam, minimize the gap (Z distance) by installing distance plate (DA 1B) between the Eva unit and the bracket holding Eva. See chapter “Positioning and orientation of Eva with Magne 4” for more details.

9.3 Low or no holding force

- Check that there is no dirt or dust on the anchor plate or Magne.
- Check that the position of the anchor plate with Magne is calibrated and that anchor plate is flat, parallel and aligned to Magne when closed.
- Check that Magne is installed close to the door handle.

9.4 Testing safety function

This section only applies to Magne 4.

Same tests shall be performed when using an external interlocking safety device together with Magne 3.

Check the safety functions by following these steps:

1. Interrupt the safety circuit before this unit when Eva is within sensing distance to Adam (door closed). The LED shall flash green and red and the safety control module go into safe state. See more information in chapter “Led indications”.
2. When door closed, reset both the safety circuit before this unit and the safety control module. The LED shall illuminate solid green.
3. Move Eva away from Adam. The LED shall change from green to red and the safety control module should go to safe state (safety circuit broken, door open).
4. Move Eva back close to Adam and reset both the safety circuit and the safety control module. The LED shall illuminate solid green (safety circuit closed, door closed).

9.5 Replacing Eva unit

When replacing an Eva unit (with unique code or with general code), to an Eva with unique code, the old code in the integrated Adam sensor first must be erased. Follow the instructions below for Magne 4 with Adam DYN or Adam OSSD.

To replace an Eva with general code to another Eva with general code, the instructions below are not necessary.

Erase code in Magne 4 DYN

1. Move the old Eva out of sensing distance from Adam.
2. Disconnect the power supply from Magne (0 V should always be connected).
3. Connect +24 VDC to DYNLINK signal in.
4. Connect the power supply to Magne (marked +24 VDC).
5. Disconnect the power supply from DYNlink signal in after 5 seconds and within 10 seconds. The Adam unit in Magne is now reset and the LED on Magne should flash red.
6. Disconnect the power supply from Magne (marked +24 VDC).
7. Remove the old Eva.
8. Install the new Eva and move it within sensing distance to Adam.

9. Connect the power supply to Magne. The programming of the new Eva is completed when the LED on Magne illuminates solid green.

Erase code in Magne 4 OSSD

1. Move the old Eva out of sensing distance from Adam.
2. Disconnect the power supply from Magne (0 V should always be connected).
3. Connect +24 VDC to OSSD1 Out and OSSD2 Out.
4. Connect the power supply to Magne (marked +24 VDC).
5. Disconnect the power supply from both OSSD1 out and OSSD2 out after 5 seconds and within 10 seconds. The Adam unit in Magne is now reset and the LED on Magne should flash red.
6. Disconnect the power supply from Magne (marked +24 VDC).
7. Remove the old Eva.
8. Install the new Eva and move it within sensing distance to Adam.
9. Connect the power supply to Magne. The programming of the new Eva is completed when the LED on Magne illuminates solid green.

10 Model overview

10.1 Magne models

For information on Eva, anchor plates and available fittings (brackets) for different door types, see chapter ‘Accessories and spare parts’.

Model	Order code	Description
Magne 3X	2TLA042022R2700	Magne without integrated Adam sensor. M12 5-pole connector with output for lock information signal. The lock information signal is high when Magne is locked.
Magne 4X DYN	2TLA042022R3000	Magne with integrated Adam sensor: Adam DYN. M12 5-pole connector. No output for information signal.
Magne 4 DYN-Info	2TLA042022R3400	Magne with integrated Adam sensor: Adam DYN info. M12 8-pole connector with output for information signal. The information signal is high when Eva is within sensing distance from Adam AND Magne is locked.
Magne 4 DYN-2Info	2TLA042022R3410	Magne with integrated Adam sensor: Adam DYN info. M12 8-pole connector with outputs for 2 information signals. One signal is high when Eva is within sensing distance from Adam and the other one when Magne is locked.
Magne 4 OSSD-Info	2TLA042022R4600	Magne with integrated Adam sensor: Adam OSSD info. M12 8-pole connector with output for information signal. The information signal is high when Eva is within sensing distance from Adam AND Magne is locked.

10.2 Accessories and spare parts

Accessories are not included in Magne and need to be ordered separately.

All mounting kits include screws and nuts necessary to install Magne on ABB Quick-Guard® fencing systems.

Type	Order code	Description
Eva General code	2TLA020046R0800	Eva with general coding (interchangeable)
Eva Unique code	2TLA020046R0900	Eva with unique coding (prevents defeat)
Anchor plate 32D	2TLA042023R0410	Magne Anchor plate 32D without magnet (width 32 mm). Cellular rubber included.
Anchor plate 32E	2TLA042023R0420	Magne Anchor plate 32E with magnet (width 32 mm). Cellular rubber included.
JSM D21C	2TLA042023R0510	Mounting kit for Magne used on hinged door (5–15 mm door gap). Fits all Magne.
JSM D23C	2TLA042023R0210	Mounting kit for Magne used on sliding door. Fits all Magne.

JSM D24	2TLA042023R0300	Mounting kit for Eva used on hinged door.
JSM D27	2TLA042023R1000	Door handle for JSM D21C.
JSM D28	2TLA042023R0100	Aluminium door handle profile used on hinged door (5–15 mm door gap). Covers Magne unit when the door is closed. Fits all Magne. Eva and anchor plate are installed in the profile.
Cellular rubber 1B	2TLA042023R3610	Spare part for anchor plate (10 mm thick).
M12-3A	2TLA020055R0000	Y-connector for connecting several units in series. For Magne 3X. Individual status not possible.
M12-3S	2TLA020055R0600	Y-connector for connecting several units in series. For Magne 3X and Magne 4X DYN.
M12-3G	2TLA020055R0700	Y-connector for connecting several units in series. For Magne 4 OSSD-Info.
JSOP-2	2TLA020053R7100	Terminal plug for Y-connector M12-3G.
Tina 12A	2TLA020054R1800	Connection block for serial connection. For Magne 4 DYN-Info and Magne 4 DYN-2Info.

11 Dimensions

All dimensions are in mm.

Magne 3 and Magne 4

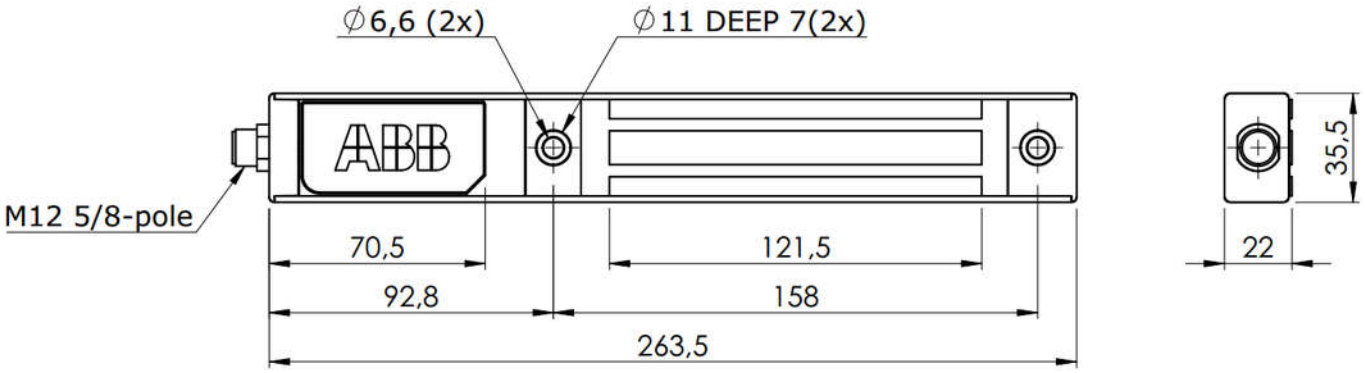

Anchor plate 32D - without permanent magnet

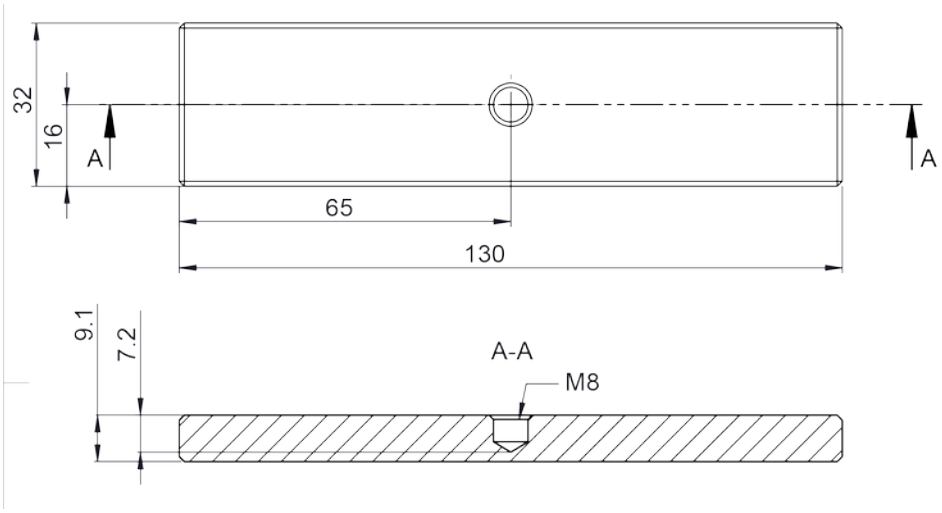

Anchor plate 32E - with permanent magnet

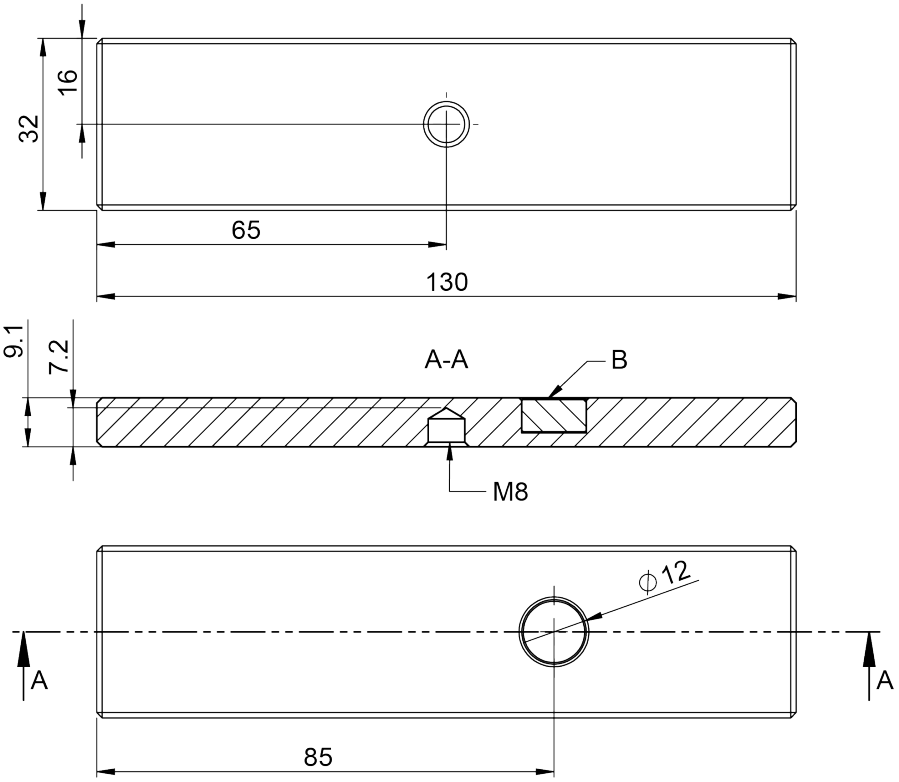

B: Permanent magnet

Cellular rubber 1B

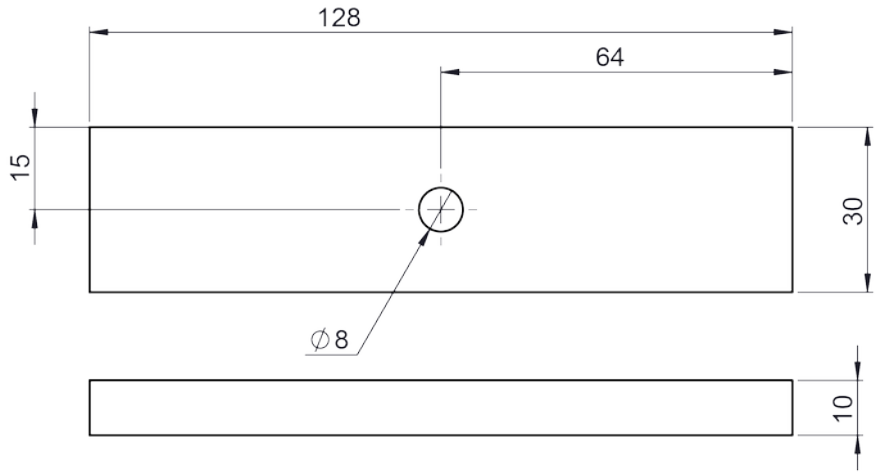

12 Technical data

Further information on the integrated interlocking device is found in ‘Eden Product Manual’ at abb.com/lowvoltage

Manufacturer	
Address	ABB Electrification Sweden AB SE-721 61 Västerås Sweden
Mechanical data	
Anchor plate material	Iron with nickel coating
Electromagnet material	Iron with zink coating
Housing material	Anodized aluminum and polycarbonate
Potting material	PUR, epoxy
PCB coating material	SEPUR 540RT
Enclosure protection	IP67
Ambient temperature	Operating temperature: -20 °C to +50 °C Storage temperature: -20 °C to +70 °C
Holding force	Up to 1500 N (on correct installation) Anchor plate with magnet 32E holding force: 30 N
Humidity	35-85 % (without ice formation or condensation)
Weight	Magne 3, Magne 4: 700 g Anchor plate 32D/32E: 290 g
Electrical data	
Operating voltage	Electromagnet +24 VDC ±15%
Current consumption	**+24 VDC:** Magne 3: 10 mA, Magne 4: 50 mA Note! Any current drawn on outputs (e.g. information output) will be an additional input current on +24 VDC. **Locking signal:** Nominal: 250 mA at 24 VDC, max. 350 mA at 27.6 VDC
Information output	Max. 20 mA
Cable dimension	Cable dimensioning should be checked when connecting several units in series. Standard cables from ABB have a cross sectional area of 0.34 mm^2. Magne does not cause any power surge when locking is activated.
Connector	M12 5-pole male connector (Magne 3X, Magne 4X DYN) M12 8-pole male connector (Magne 4 DYN-Info, Magne 4 DYN-2Info, Magne 4 OSSD-Info)
All Magne 4:	
Transponder frequency	4 MHz
Activation delay on connecting	< 2 s
Voltage drop output	VCC - 2.5 VDC
Assured release distance (S_{ar})	25 mm
Assured operation distance (S_{ao})	7 mm

Magne 4 DYN:	
DYN output	15 mA (current limited)
Response time at activation	<100 ms
Response time at deactivation	<30 ms
Magne 4 OSSD:	
OSSD output	Max. 50 mA per output (current limited)
Response time at activation	<100 ms
Response time at deactivation	First unit <30 ms For each additional unit < 10 ms
Voltage drop for OSSD output	VCC - 2.5 VDC at 25 mA
Power from switched off position (OSSD out)	<3 µA
Safety / Harmonized standards	
Conformity	European Machinery Directive 2006/42/EC EMC directive 2014/30/EU RoHS directive 2011/65/EU RoHS3 directive 2015/863
Application standard compliance	EN ISO 14119:2013
Functional safety standard compliance	EN ISO 12100:2010 EN ISO 13849-1:2015, PL e/Category 4, $PFH_D = 4.50 \cdot 10^{-9}$ EN ISO 13849-2:2012 EN 62061:2005+A1:2012+A2:2015, SIL3, $PFH_D = 4.50 \cdot 10^{-9}$ EN 61508:2010, SIL3, $PFH_D = 4.50 \cdot 10^{-9}$
⚠ **Warning!**	The safety related values are based on interlocking device Eden and are not valid for the locking function.
Electrical safety standard compliance	EN 60204-1:2006+A1:2009 EN 60664-1:2007
Electromagnetic compatibility standard compliance	EN 60947-5-2:2007+A1:2012 EN 60947-5-3:2013
Certificates	cULus, TÜV Süd
Information for use in USA/Canada (UL)	
Enclosure	Type 1
Intended usage	Applications according to NFPA 79
Connecting cables	Cables to comply with CYJV/7, with a conductor area of min. 0.2 mm^2.

Power source	The Limited Voltage / Current source must comply with one of the following: A) An isolating device such that the maximum open circuit voltage potential available to the circuit is not more than 30 VDC and the current is limited to a value not exceeding 8 amperes measured after one minute of operation. B) A suitable isolating source in conjunction with a fuse in accordance with UL248. The fuse shall be rated max. 3 A and be installed in the 30 VDC power supply to the device in order to limit the available current.
Conductor area	Max. current limit for overload protection: AWG (mm^2) Amps 24 (0,20)2 22 (0,32)3 20 (0,52)5 18 (0,82)7

13 EC Declaration of conformity

EC Declaration of conformity

(according to 2006/42/EC, Annex 2A)

We	ABB Electrification Sweden AB SE-721 61 Västerås Sweden	declare that the safety components of ABB AB manufacture with type designations and safety functions as listed below, is in conformity with the Directives 2006/42/EC – Machinery 2014/30/EU – EMC 2011/65/EU – RoHS 2015/863 – RoHS3
Authorised to compile the technical file		ABB Electrification Sweden AB SE-721 61 Västerås Sweden
Product		**Certificate**
Electromagnetic process lock including non-contact safety sensor Adam DYN/Adam OSSD used together with actuating part Eva General/unique Magne 4X DYN Magne 4 DYN-Info Magne 4 DYN-2Info Magne 4 OSSD-Info		Z10 17 06 49833 0029 Rev.01
Certification Body		TÜV Süd Product Service GmbH Ridlerstrasse 65 80339 München Germany
Used harmonized standards		EN ISO 12100:2010, EN ISO 14119:2013, EN 60947-5-2:2007+A1:2012, EN 60947-5-3:2013, EN ISO 13849-1:2015, EN ISO 13849-2:2012, EN 62061:2005+A1:2012+A2:2015, EN 60204-1:2006+A1:2009, EN 60664-1:2007
Other used standards		EN 61508:2010

Magnus Backman
R&D Manager
Kungsbacka 2021-01-20

abb.com/lowvoltage

Original