Fire systems and devices
Product catalogue

Menvier

Complete fire systems for the protection of life and property



Powering Business Worldwide



Powering business worldwide

As a global power management company, we help customers worldwide manage the power needed for buildings, aircraft, trucks, cars, machinery and businesses.

Eaton's innovative technologies help customers manage electrical, hydraulic and mechanical power more reliably, efficientlt, safely and sustainably.

EATON
Powering Business Worldwide



Leadenhall Building
London, UK

Excellence and innovation in fire safety solutions.

When it comes to protecting life and property there's no room to compromise. You need a partner that can support you with tried and tested products, global capabilities and local delivery.

Eaton is a leading manufacturer and global supplier of high quality fire systems. With our ability to provide complete systems, not just components, you can be confident in the knowledge that all of our products have been specifically designed and tested to ensure that they are all fully compatible to form a reliable and compliant fire detection and alarm system.

Our large multi-disciplined research and development team is responsible for the integration of the latest technology into the full range of fire products, ensuring that our products are designed to the latest fire industry standards and manufactured to the highest levels of quality. The many innovative, new and improved products featured in this catalogue demonstrate our commitment to staying at the leading edge of technological development for fire detection and alarm equipment.

Our core values and aims are:

- Investment in people
- To partner with our customers to develop open, long term relationships
- To have an unpretentious, straightforward and honest approach to business
- The continued investment in research and development
- Investment in manufacturing facilities to ensure they remain world class
- To produce products that are in full compliance with standards
- To operate in an environmentally friendly way - in the products we design and the facilities in which we make them
- To have high ethical standards

Our solutions and services are recognised by a wide range of accreditation bodies, so you can count on products that comply with national and industry standards, while receiving full support, from initial system design to monitoring and service.



Ankara Esenboğa International Airport
Ankara, Turkey



St Pancras Station
London, UK



Doncaster Cultural and Civic Quarter
Doncaster, UK

Manufacturing fire solutions is just one small element of what we do.

Services

We believe that ownership of fire detection systems extends beyond the initial purchase of the products themselves. We therefore offer customers a wide range of services to ensure that their installations not only meet basic operational and safety requirements on day one, but will continue to do so throughout their lifetime.

From training and support on how to select products for a specific application through to the provision of routine on-site testing and maintenance. You can be sure that Eaton is ready to support you, whatever your needs.

Major projects

Design and installation of a fire detection system can often be a complex process, with each project often bringing its own challenges in making sure the system is compliant, reliable and easy to operate. Our team of engineers will partner with your project management team using our expertise to meet the specific requirements of your project.

Eaton has a great deal of experience handling major projects across the globe. We can help not just with the product and technical support but also by providing guidance and advice to specifiers and project management teams on topics such as standards and regulations.

We are BAFE SP203 certified for design, commissioning and maintenance of fire detection systems, giving our customers the peace of mind they need that our systems conform with all necessary safety requirements.

Technical support

Our dedicated technical support team are able to offer customers around the world advice and guidance on a wide variety of technical matters via telephone or email. In the vast majority of cases, a process of systematic questioning enables the team to diagnose the challenge and advise the customer on the appropriate solution.

Sometimes more detailed troubleshooting and analysis methods may be used to determine the actual requirements and the best way of resolving it. If necessary, the technical support team will also call on the knowledge and expertise of Eaton's product management, R&D and design departments to help resolve the customer's issue.

In addition, the technical support team can provide customers with assistance on product information, installation and operating instructions, and the legislative requirements of your fire detection systems.



Mariner's Quay Apartment Complex
Newport



Contents

1. Introduction

An introduction to fire systems 10
Conventional and two-wire systems 11
Addressable systems 12
UL listed fire systems 13

2. Intelligent addressable systems

Fire panels and repeater panels 16
Addressable devices 22

3. UL intelligent addressable systems

Fire panels and repeater panels 45
UL listed devices 47

4. Conventional systems

Fire panels and repeater panels 58
Conventional devices 67

5. Appendix

Notes 83
Contact details 86

An introduction to fire systems

Eaton manufacture and supply a range of different types of fire systems, meaning we can provide a high quality fire solution whatever your need is.

There are a vast array of fire detection systems and devices on the market today, ranging from the relatively simple to the most technically sophisticated. Modern automatic fire detection systems are available in two types, conventional and addressable - which, broadly speaking, tend to be used in smaller and larger installations respectively. For more detail you can read our fire systems guide over the next few pages.

The basics of fire detection

A control panel is the hub of the detection system. All the devices which are part of the fire detection system are connected to this central panel which processes the signals received from the input devices and gives out signals to the output devices. Input devices such as detectors measure signals of combustion and communicate with panels, which in turn trigger output devices such as an audible or visual alarm device. Fire alarm panels can be further sub segmented into addressable or conventional panels.

There are various types of fire detection systems each suited to different applications or building types. A fire detection system can vary significantly in both complexity and price, from a single panel with a detector and sounder in a small commercial property to a complex intelligent addressable system in a multi-occupancy building.

A fire detection system can comprise of detection devices, notification devices and manual callpoints. The size of the building determines the number of detectors that would be required. The system works via the control panel receiving signals from the detection devices and then sending transmitting signals to the notification devices.

Introduction
An introduction to fire systems







Conventional systems (p57-80)

The philosophy of a conventional system revolves around dividing the building into a number of areas called zones. The detectors and call points within each zone are then wired on a dedicated separate circuit.

In the event of a detector or call point being triggered, the panel is able to identify which circuit contains the triggered device and thereby indicate which zone the fire alarm has come from. The indicated zone can then be manually searched to locate the triggered device.

With this type of functionality a conventional system is best used in smaller builds where it wouldn't be difficult to locate the triggered device in a given zone.

Two-wire systems

Two-wire systems are based on standard conventional system technology, but it also incorporates additional functionality to enable the callpoints, detectors and sounders for each separate zone to be wired on a single common circuit.

By combining both the detection and the alarm annunciation wiring into a single circuit, considerable savings in installation time and cabling can be achieved.

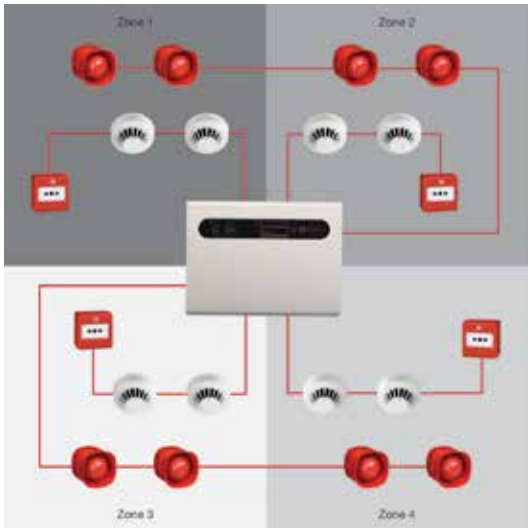

Typical conventional system architecture

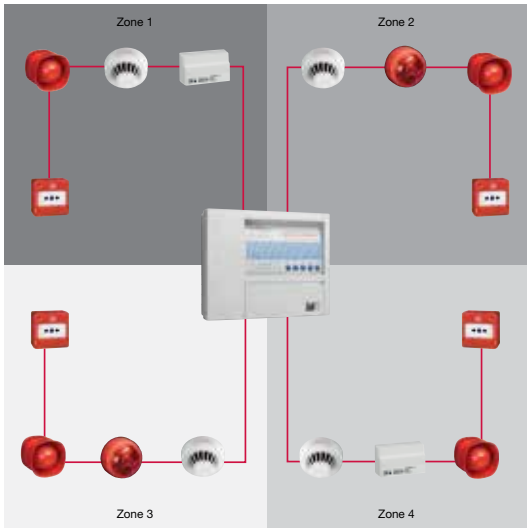

Typical two-wire system architecture

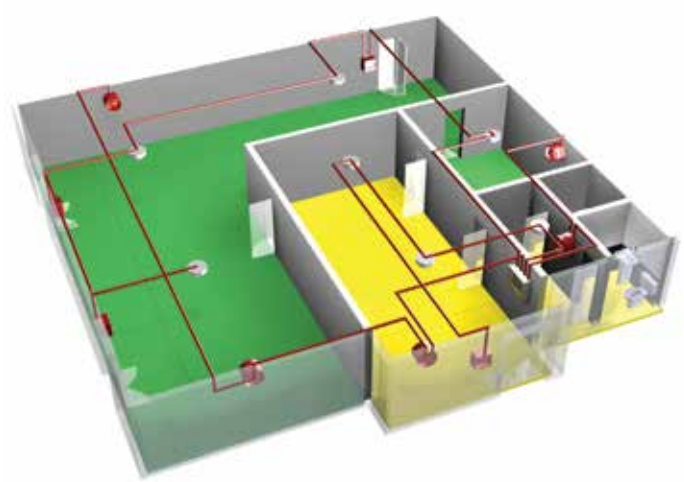

Example conventional system layout

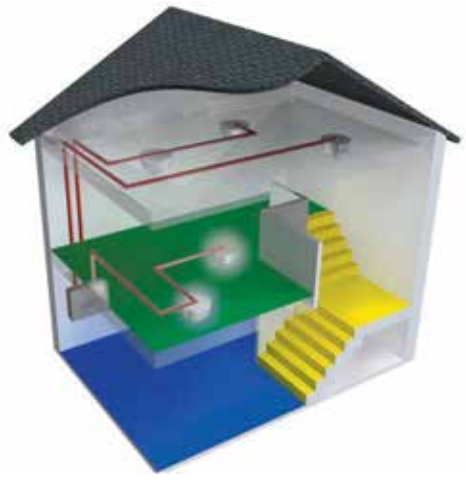

Example two-wire system layout



Addressable systems (p15-42)

Intelligent addressable systems overcome the limitations of conventional systems as each fire detecting sensor or call point is electronically coded with a unique identification or 'address' which is programmed into the device during installation.

By using each devices' unique address, the control panel is able to conduct two way communication with any of the addressable devices connected to the system.

Under normal conditions the control panel continuously interrogates each device in sequence and analyses the reply to determine the status of each sensor or call point. The panel checks whether each device is functioning correctly and also the amount of smoke or heat that the device is currently sensing.

With the functionality of being able to pinpoint exactly which device is being triggered in an alarm or for a fault, addressable systems are perfect for mid to large size builds with multiple rooms and floors.

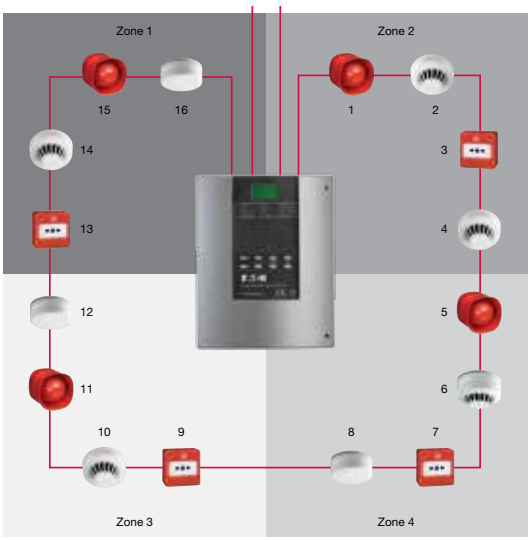

Typical addressable system architecture

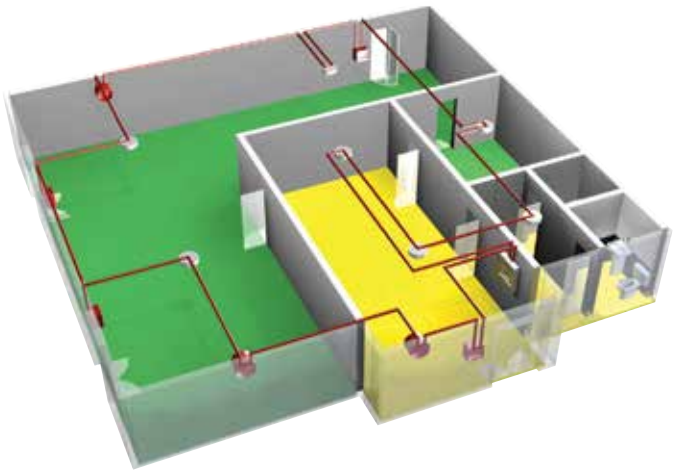

Example addressable system layout



UL listed fire systems (p43-56)

Underwriters Laboratories Inc. (UL) is an independent product safety certification organisation, established in 1894, to develop standards and test procedures for products, materials, components, assemblies, tools and equipment. Chiefly dealing with product safety it also evaluates and certifies the efficiency of a company's business processes through its magnificent system registration programs.

Since the launch of our UL Listed fire product range, several prestigious projects worldwide have been supplied including Hyatt Resort and Spa, Shangri-la at the Fort and Times Square projects in South East Asia and several major projects in the Middle East including the prestigious Riyadh Financial District in the Kingdom of Saudi Arabia.

The Eaton UL range is designed to provide a solution for all sizes of project, from the simple small stand alone system to the large multi panel networked system with PA/VA and BMS integration.

SIGNALING
UL
LISTED
4AC5
FIRE ALARM
EQUIPMENT





Contents

Intelligent addressable systems

Panels

DF2000 addressable panel 16



DF6100 addressable panel 18



DF6000 addressable panel 20



Devices

Sensors 22



Bases 24



Callpoints 26



Wall sounders and VADs 27



Beam detector 31



Duct probe 31



Interfaces 32



Micro interfaces 36



Networking interfaces 37



Ancillaries 39



Software 41



Test equipment 42



DF2000
Intelligent addressable control panel



"The DF2000 serves as the optimum solution for buildings requiring smaller addressable systems."

The Eaton DF2000 is an entry level intelligent addressable control panel which can be configured for either 1 or 2 loop operation, and is certified to EN54 parts 2 & 4.

The panel has a graphic display, providing a simple menu driven end user interface. With the DF2000 ability to support Eaton cause and effect programming and a range of user controllable functions it makes the panel suitable for a varied range of projects from small warehouses to small/ medium office developments as well as many small industrial applications.

As with all Eaton intelligent addressable panels, the DF2000 uses "spur tolerant" soft addressing to minimise installation time and remove the potential for errors often associated with many forms of manual addressing.

Benefits

- Configurable as a 1 or 2 loop panel
- Up to 200 addresses per loop (up to 60 sounders/beacons and up to 20 I/Os, subject to loop loading calculations)
- Soft addressing
- Menu-driven graphic screen
- Multi-language selection capability
- Integral battery and power supply
- 2x7Ah batteries included
- Easy to operate end user controls
- Full system integrity with Eaton developed protocol
- Core range of compatible devices
- 4 sounder circuits
- Monitored for open and short circuit (max 3.0A combined)

Dimensions

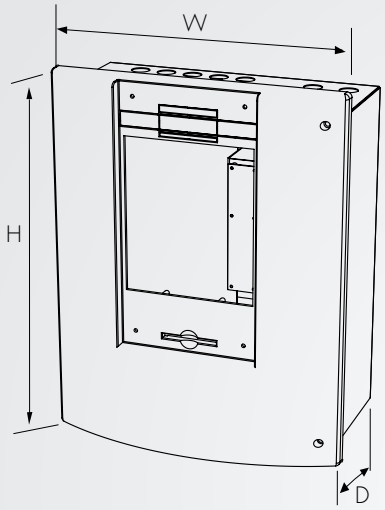

H (mm)	W (mm)	D (mm)
400	320	170

Features	DF2000GCPD
Ingress protection	IP30

Catalogue numbers

Description	Code
2 Loop Control Panel (DF2000)	910189FULL-0200
Standard repeater panel	DF6000PR
Fire alarm system log book	MFALOG

Compatible repeater panels

The DF2000 has a standard repeater panel available. Ideal for larger sites, the repeater allows you to display the system information from multiple locations.



24V dc output

Features	DF6000PR
Active or passive option	✓
Integral battery and power supply	✓
Supervisor and engineer modes through code access	✓
Ingress protection	IP30



DF6100
Intelligent addressable control panel



"The simplicity of operation, powerful cause and effect programming capability and competitive pricing make the system suitable for a wide range of small to medium sized projects."

The DF6100 is a high specification addressable panel for medium sized builds that is equipped with a versatile touch screen user interface. It is available as a 1 (DF6100) or 2 (DF61002) loop panel.

The powerful cause and effect programming capability and competitive pricing make the system suitable for a wide range of small to medium sized projects. The panels can operate as standalone or as part of a network with our other addressable panels (additional network card required).

- Soft addressing
- Large versatile touch screen user interface
- Multi-language selection capability
- Integral battery and power supply
- 2x7Ah batteries included
- Flexible distributed network capability
- Full range of compatible devices
- Flexible and easy to design, system cause and effect using site installer software
- Compatible with our addressable repeaters (see p21)

Benefits

	DF6100	DF61002*
No. of loops	1*	2*
Addresses per loop	200**	200**
No. of conventional sounder circuits	2***	2***
Ingress protection	IP30	IP30

* No zonal LEDs
** Up to 60 sounders/beacons and up to 20 I/Os
***Monitored for open and short circuit (max 1.5A combined)

CE VdS Approved product

Dimensions

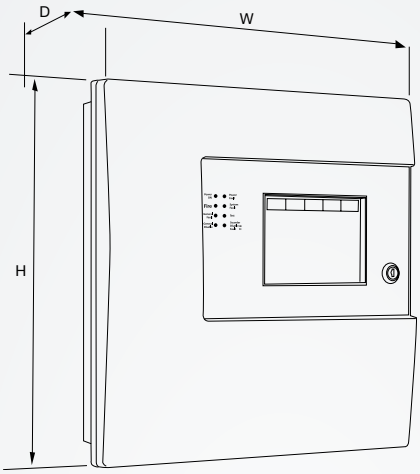

	H (mm)	W (mm)	D1 (mm)
Panel	375	357	95
Cutout	345	325	50



DF6100 pictured with a range of compatible devices

Catalogue numbers

Description	Code
1 loop control panel, VDS	DF6100
2 loop control panel, VDS	DF61002
Add to end of product code if network card required	NC
Add to end of product code if dual redundancy network card required	NCDR
Network Kit for DF6100/2 and CF11/CF12	DF61NETKIT
Passive repeater panel	DF6000PR
Touch-screen repeater panel	DTPR6000
Fire routing equipment PCB	ZPCB2187FRE
Fire alarm system log book	MFALOG



DF6000
Intelligent addressable control panel



"The large capacity, ability to support complex cause and effect programming and wide range of user controllable functions make the system suitable for a diverse range of projects"

The DF6000 series are high specification intelligent addressable control panels, which are fully certified to EN54 parts 2 and 4.

Each panel is networkable with up to 126 other Eaton addressable control panels, only requiring the addition of one of our network cards for this functionality. Using our latest software, the panels can be set up for smoke management protocols, when used in conjunction with FC6 or FC18 fan controller units, and the new MCOM-FC interface module.

	DF60002	DF6000
No. of Loops	2	4
Addresses per Loop	200*	200*
No. of Conventional Sounder Circuits	4**	4**
Ingress protection	IP30	IP30

* Up to 60 sounders/beacons and up to 20 I/Os
**Monitored for open and short circuit (max 1.5A combined)

Benefits

- Soft addressing
- Large versatile touch screen user interface
- Multi-language selection capability
- Integral printer (optional)
- Integral battery and power supply
- 2x 12Ah batteries included
- Flexible distributed network capability
- Full range of compatible devices
- Easy to design system cause and effect using site installer software
- Additional functionality through FRE & FPE (Fire Routing Equipment & Fire Protection Equipment) which are both monitored outputs

Class change functionality

Our DF6000 panel has a variety of easy to use additional software options on top of the standard class change facility; this provides benefits for a number of regions.

Class change input on the DF6000 can be used for functions such as Australian Fire Brigade, HMO operation, Swedish mode, Australian tone sounders for class change and different tones.



Compatible repeater panels

The DF6000 has both a passive and a touchscreen repeater panel available. Ideal for larger sites, the repeater allows you to display the system information at multiple locations.





Features	DF6000PR	DTPR6000
Active or passive option	✓	✓
No programming required	×*	✓
Programmable input	×	✓
Integral battery and power supply	✓	✓
Supervisor and engineer modes through code access	✓	✓
Fire and fault volt free programmable relays	×	✓
Adjustable volume from panel	×	✓
Ingress protection	IP30	IP30

*Programming not required on network version.

Dimensions

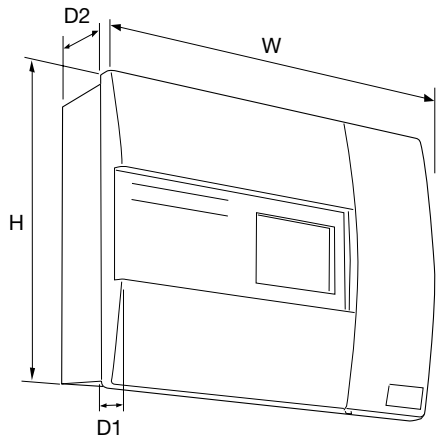

	H (mm)	W (mm)	D1 (mm)	D2 (mm)
Standard	397	497	55	125
EB*	397	497	55	225

*Extended battery version

Catalogue numbers

Description	Code
2 loop control panel	DF60002
4 loop control panel	DF60004
2 loop control panel, integral printer	DF60002P
4 loop control panel, integral printer	DF60004P
Add to end of product code if network card required	NC
Network kit (for retro fit)	DF6000NETKIT
Printer kit (for retro fit)	DF6000PKIT
Hinged protective cover kit	DF6000COV
Passive repeater panel	DF6000PR
Touch-screen repeater panel	DTPR6000
Fire alarm system log book	MFALOG

Sensors

Our addressable range has multiple options for intelligent addressable sensors. All sensors are designed for optimum functionality in mid-large sized builds. They are all soft addressed and have integral short circuit isolators. We also offer a loop connected remote indicator, designed to offer discreet remote indication and an ability to monitor multiple sensors. This helps to minimise wiring requirements.

Optical smoke sensor
MAP820



Typical applications:

Suitable for most applications.

Fastest response to slow burning or smouldering fires which give rise to large visible smoke particles.

Photo-thermal sensor
MAOH850*



Typical applications:

Responds quickly to fast clean burning fires.

Maintains the advantage of optical sensors when detecting smouldering fires.

Heat sensor
MAH830



Typical applications:

Environments where the ambient conditions might cause false alarms with smoke detectors.

Examples include areas with high levels of dust or fumes.

The MAH830 can operate in 3 modes: rate of rise, fixed heat 77°C and fixed heat 90°C.

These modes are set by the panel.

*The MAOH850 has day/night modes available, programmeable from the site installer software. The day mode uses the heat aspect of the sensor for areas which may have smoky environments during, for example working hours. The night mode uses a combination of A2S and smoke detection. If not programmed, the sensor defaults to dual mode.

Dimensions

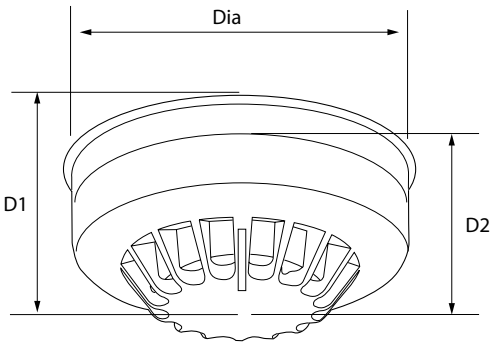

Description	Diameter (mm) (incl base)	Depth (mm) (excl base)	Depth (mm) (incl base)
Optical	104	33	45
Photo-thermal	104	43	55
Heat	104	43	55

Performance

Feature	MAP820	MAOH850	MAH380	MAH380	MAH380
Mode	Optical	Photo-thermal	Rate of rise	Fixed heat 77°C	Fixed heat 90°C
Area coverage*	100m^2	100m^2	50m^2	50m^2	50m^2
Heat class	N/A	A2S	A2R	BS	CS
Alarm temperature	N/A	60 ˚C	60 ˚C	77 ˚C	92 ˚C
Ingress protection	IP30	IP30	IP30	IP30	IP30

*(subject to local standards)

Catalogue numbers

Description	Code
Optical smoke sensor - MAP820	400002FIRE-0008X
Photo-thermal sensor - MAOH850	400004FIRE-0010X
Multi-mode heat sensor - MAH830	400003FIRE-0009X

Indicators

Our indicators are designed as additional indication devices when sensors have been triggered. These products are designed to be used as indicators only, and not visual alarm devices (see p24 and 27 for EN54-23 certified VADs).

Addressable remote indicator
MRIAD



Typical applications:

Monitoring multiple sensors within a specific area.

Must be configured through site installer. The remote indicator can be programmed as a sounder.

Standard remote indicator
CIR301



Typical applications:

The CIR301 can only be connected to one sensor and is powered by this sensor.

There is a weather resistant version also available. (Not IP65).

Staff warning device
MAB870



Typical applications:

As this product does not meet EN54-23 requirements as a beacon we recommend it as an internal warning device in offices, schools or manned reception areas.

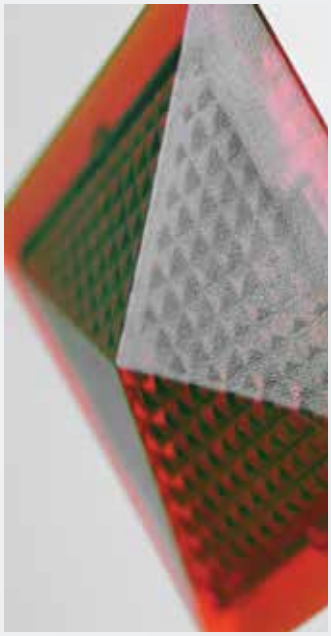

Remote indicator lens detail

Dimensions

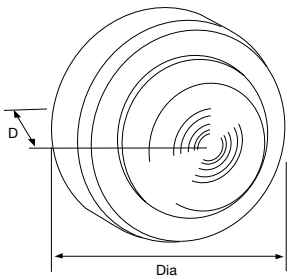

Staff warning device

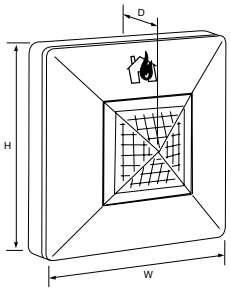

Remote indicators

Description	Height (mm)	Width (mm)	Depth (mm)
Staff warning device	101	33	
Remote indicators	87	87	30

Catalogue numbers

Description	Code
Loop connected remote indicator	MRIAD
Standard remote indicator	CIR301
Weather resistant standard remote indicator	CIR301WP
Staff warning device	MAB870

Bases

We stock a variety of bases, providing a wide functionality for different situations. The standard base (MAB800) provides a foundation for our addressable sensors. The range of bases also includes capability for additional sounder and sounder beacon operation. Both our sounder base (MAS850) and VAD sounder beacon base (MASB890) can be used as standalone devices when fitted with our cover plate (CASC).

Standard base
MAB800



Typical applications:

General use product, recommended for use in all environments

Sounder base
MAS850



Typical applications:

Areas of limited extent, where lower output volume is required

Areas with limited cable space

Concrete ceilings, to save cabling

Sounder beacon base
MASB890 (MASB870)



Typical applications:

The MASB890 is an EN54-23 certified Visual Alarm Device (VAD) sounder beacon base.

It is compatible with the Eaton range of intelligent addressable sensors and can also be used as a dedicated discreet standalone device.

(The MASB890 sounder beacon base is also available for indication purposes, where EN 54-23 is not a requirement.)

Sounder base with cover
MAS850 + CASC



Typical applications:

Optional cover plate can be used to enable the sounder to operate as a dedicated discreet stand alone device



VAD sounder beacon base shown with optical sensor

Features

	MAB800	MAS850	MASB870	MASB890
First fix base	✓	✓	✓	✓
Loop integrity switch	✓	✓	✓	✓
Multiple cable entry points	✓	×	×	×
Selectable tones	×	✓	✓	✓
Ingress protection		IP40	IP40	IP21C

Performance

	MAS850	MASB890
Sound output		
Low volume	84dB at < 4mA	77dB at < 6.6mA
Medium volume	92dB at < 8mA	89dB at < 8mA
High volume	95dB at < 12mA	90dB at < 9mA
Flash rate	n/a	0.5 Hz flash*

*Polar dispersion infromation available on datasheet

Dimensions

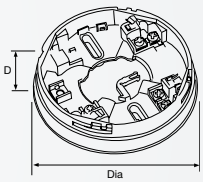

Standard base

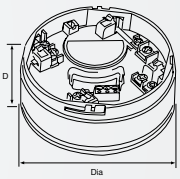

Sounder base

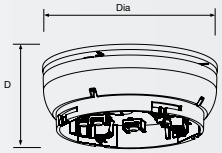

Sounder beacon base

Description	Diameter (mm)	Depth (mm)
Standard base	104	22
Sounder base	102	40
Sounder beacon base	115	44

Catalogue numbers

Description	Code
Standard base	MAB800
Sounder base	MAS850
VAD sounder beacon base	MASB890
Sounder beacon base	MASB870
Cover plate (pack of 5)	CASC
Base shroud	BAR3000-1



Callpoints

Two versions of the intelligent addressable callpoint are available, the surface/flush mounted MBG813 or the weatherproof MBG817. Both have an integral short circuit isolator and are very simple to install. The callpoints are packaged with 2 frangible glass elements and test key, with a comprehensive range of further accessories available.

Surface/flush mounted callpoint
MBG813



Typical applications:

General use product, suitable for use in most indoor applications.

Weatherproof callpoint
MBG817



Typical applications:

Builds requiring a callpoint in harsh conditions. For example, outside or in a wash down area.

Dimensions

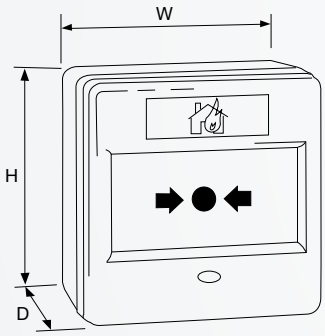

Description	H (mm)	W (mm)	D (mm)
Surface mounted	87	87	36
Flush mounted	87	87	57
Weatherproof	87	87	59

Features

	MBG813	MBG817
Fast fit clip	✓	✓
High Visibility LED	✓	✓
Heavy duty terminals	✓	✓
Ingress protection	IP42	IP65

Catalogue numbers

Description	Code
Surface/flush callpoint	MBG813
Weatherproof callpoint	MBG817
Protective hinged cover (pack of 10)	CXPC
Recessing bezels (pack of 10)	MBGBEZ
Resettable element kit (pack of 10)	MBGREKIT
Spare break glasses (pack of 5)	MBG118
Callpoint keys (pack of 10)	MFBGKEY3

Further accessories:



Callpoint shown with protective hinged cover

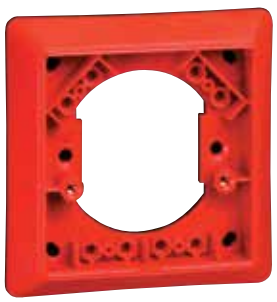

Callpoint recessing bezel

Wall sounders and VADs

There are also two versions of our intelligent addressable wall sounder, the internal (MAS850LPS) and the weatherproof (MAS850LPSWP). Their highly efficient design offers excellent sound output levels despite the low current consumption. They both contain an integral short circuit isolator and have multiple tones and volume levels which can be controlled from the panel globally, or individually via site installer.

We also offer a new open class Visual Alarm Device (MASB880), combining the high output sound of the wall sounders with a stronger LED to meet the EN54-23 VADs requirements. The open class functionality allows the VADs to be installed in open areas such as warehouses or airport terminals.

Wall sounder
MAS850LPS/
MAS850LPSWP



Typical applications:

Both an indoor and weatherproof variant of the wall sounder are available, allowing for consistent performance for any application where a wall sounder is required.

VAD wall sounder beacon
MASB880/MASB880WP
MASB860*/MASB860WP*



Typical applications:

The MASB880 is an addressable open class VAD suitable for all markets where EN54-23 VADs are now a requirement.
White flash only.

(The MASB860 wall sounder beacon is also available for indication purposes, where EN 54-23 is not a requirement. **Red flash only.**)

Dimensions

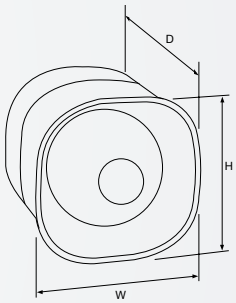

Internal wall sounder / sounder beacon

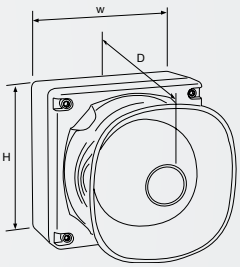

Weatherproof wall sounder/ sounder beacon

Description	H (mm)	W (mm)	D (mm)
Wall sounder	105	105	95
WP wall sounder	108	108	103
VAD sounder beacon	108	108	96
WP VAD sounder beacon	110	110	105

Tones

	MAS850LPS/ MAS850LPSWP	MASB880/ MASB880WP
Continuous	✓	✓
Two tone @ 1Hz cycle	✓	✓
Slow whoop 500-1200Hz in 3.5 seconds / 0.5secs gap	✓	✓
Pulsed 1Hz (Virtual Tone)	✓	✓
Pulsed sweep ISO8201 3x500ms 800-970Hz 1½ Sec Gap	×	×
Bell tone	×	×

Sound output

	MAS850LPS/ MAS850LPSWP	MASB880/ MASB880WP
Low volume	87dB at < 2mA	87dB at < 8.6mA
Medium volume	93dB at < 3mA	93dB at < 10mA
High volume	100dB at < 6mA	100dB at < 11mA
Flash rate	n/a	0.5Hz Flash

	MAS850LPS/ MASB880/ MASB860	MAS850LPSWP/ MASB880WP/ MASB860WP
Ingress protection	IP42	IP66

Catalogue numbers

Description	Code
Internal wall sounder	MAS850LPS
Weatherproof wall sounder	MAS850LPSWP
Vad wall sounder beacon	MASB880
Weatherproof VAD wall sounder beacon	MASB880WP
Wall sounder beacon	MASB860
Wall sounder beacon weatherproof	MASB860WP

Wall sounder VAD
CASB493/CASB493WP
CASB483/ CASB483WP



Typical applications:

This EN 54-23 compliant sounder beacon visual alarm device (VAD) is suitable for fire notification in commercial buildings. The weatherproof variant, with an IP66 ingress protection rating, can be used in wet and outdoor environments.

Red (CASB483/WP) or white (CASB493/WP) flash options available.

Dimensions

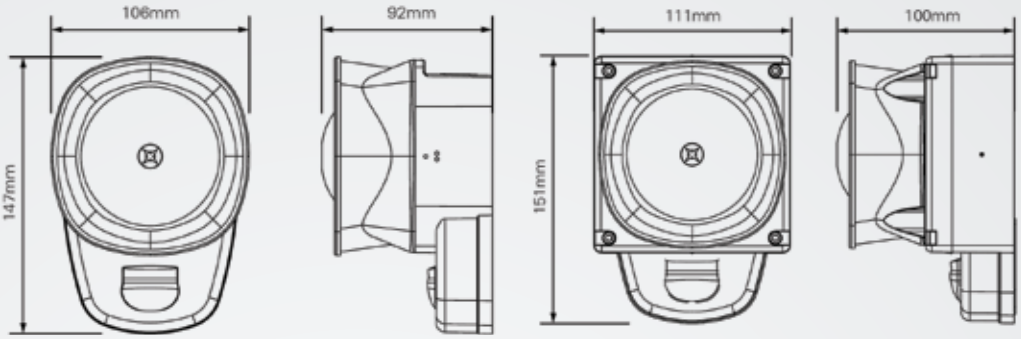

Wall sounder VAD

Wall sounder VAD (weatherproof)

Description	H (mm)	W (mm)	D (mm)
Wall sounder VAD	147	106	92
Wall sounder VAD (weatherproof)	151	111	100

Wall VAD
CAB492W/CAB482W



Typical applications:

A low-profile, low-current solution to the latest EN 54-23 fire standard, this fire alarm beacon VAD. It is also compatible with a range of bases making it suitable for a variety of applications.

Red (CAB482W) or white (CAB492W) flash options available.

Dimensions

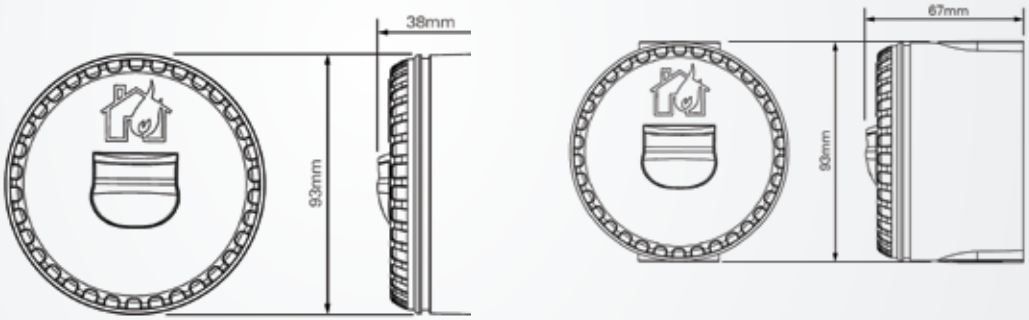

Wall VAD (shallow base)

Wall VAD (deep base)

Description	H (mm)	W (mm)	D (mm)
Wall VAD (shallow base)	93	93	38
Wall VAD (deep base)	93	93	67

Ceiling VAD
CAB492CS/CAB482CS



NEW PRODUCT

Typical applications:

This EN 54-23 certified, low-current fire alarm beacon is suitable for ceiling mounting. It is compatible with a shallow base providing flexibility as to where the VAD can be installed.

Red (CAB492CS) or white (CAB482CS) flash options

Dimensions

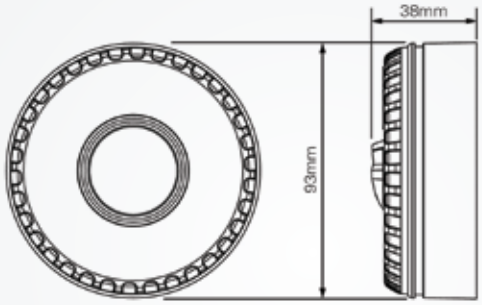

Ceiling VAD

Description	H (mm)	W (mm)	D (mm)
Ceiling VAD	93	93	38

Tones

	CASB493/CASB493WP CASB483/CASB483WP	CAB492W/CAB482W	CAB492CS/CAB482CS
Flash rate (low power consumption)	0.5Hz	0.5Hz	0.5Hz
Operating current (depending on setting and LED colour)	13.4-47.5mA	12.5-45mA	12.5-45mA
IP protection	IP21C WP variant : IP66	Shallow base: IP33C Deep base: IP65	IP21C

Catalogue numbers

Description	Code
CASB493 Wall sounder VAD, red, white flash	8500110FULL-0199X
CASB483 Wall sounder VAD, red, red flash	8500111FULL-0197X
CASB493WP Wall sounder VAD, red, white flash, weatherproof	8500114FULL-0200X
CASB483WP Wall sounder VAD, red, red flash, weatherproof	8500115FULL-0201X
CAB492WS Wall VAD, red, white flash, shallow base	812033FULL-0209X

Description	Code
CAB492WD Wall VAD, red, white flash, deep base	812034FULL-0210X
CAB482WS Wall VAD, red, red flash, shallow base	812035FULL-0211X
CAB482WD Wall VAD, red,red flash, deep base	812036FULL-0212X
CAB492CS Ceiling VAD, red, white flash, shallow base	812050FULL-0269X
CAB482CS Ceiling VAD, red, red flash, shallow base	812037FULL-0214X

Addressable fire systems

Devices - beam detectors



Beam detectors, typically used in large open areas, such as airports, shopping centres and warehouses

Beam detectors

There are two available loop powered reflective beam detectors in the intelligent addressable range. The MAB50R has a range of up to 50 metres and the MAB100R has a range of up to 100 metres. Neither requires a power supply and are both equipped with a simple set up mode to enable easy and quick alignment during installation.

The beam detector is loop powered with one unique address, and has the ability to add address text at the panel. There is a maximum limit of 20 per loop (based on loop loading calculations).

Addressable reflective beam detector
MAB50R / MAB100R



Dimensions

H (mm)	W(mm)	D (mm)
210	130	120

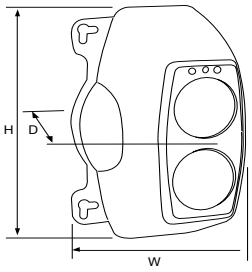

Typical applications:

Large open areas such as warehouses, manufacturing plants, shopping centres, airports etc.

Allows access to the automatic gain control data from the detector.

The beam detector will show fire, fault and pre-alarm.

Features

	MAB50R	MAB100R
Operating range	5 to 50 metres	50 to 100 metres
Tolerance to beam misalignment at 35%	Detector ± 0.8˚, Prism ± 5.0˚	Detector ± 0.8˚, Prism ± 5.0˚
Fire alarm thresholds	2.50dB (25%) 3.74dB (35%) 6.02dB (50%)	2.50dB (25%) 3.74dB (35%) 6.02dB (50%)
Optical wavelength	880nm	880nm
Ingress protection	IP40	IP40

Beam detectors have 3 operating modes:

Prism targeting mode designed to provide simple initial alignment of beam and reflector assembly.

Alignment mode enables accurate fine tuning of beam alignment without the need for additional calibration equipment or a second operator.

Normal running mode during standard operation.

Duct probe mounting kit

The presence of smoke in a ventilation duct is detected by sampling the airflow through the duct via two sampling tubes. A detector and base are mounted within the sampling chamber, which is located on the external skin of the duct, with sample and exhaust probes passing into the duct in an area of low turbulence. The unit requires an addressable optical detector and base and is supplied with full fixing instructions.

Duct probe unit
MDP201





Duct probe unit shown with optical detector fitted

Typical applications:

Detecting presence of smoke in ventilation ducts.

Requires base and detector to be ordered separately.

Features

Duct width range	300mm to 1500mm 5 to 50 metres
Duct air speed range	1m/s to 20m/s Detector ± 0.8˚ Prism ± 5.0˚
Temperature range	-20°C or +60°C
Optical wavelength	880nm
Ingress protection	IP67

Catalogue numbers

Description	Code
Reflective beam detector (50m range)	400030FIRE-0066X
Reflective beam detector (100m range)	400031FIRE-0070X
Mounting bracket	MRBFP
Duct probe unit	MDP201

Interfaces

We supply an extensive range of interfaces to support our control panels. Interfaces allow for a wide variety of installations to be simplified without the use of specialist or customised equipment. For assistance deciding which interfaces will benefit you the most, contact our technical support team at firetechsupport@eaton.com

Zone monitor unit
CZMU352



Typical applications:

The unit connects a zone of suitable conventional detectors (20 detectors per zone) and a separate zone of conventional callpoints (if required) to an addressable panel.

It allows for easier connection to existing conventional detection zones, as long as the devices used are compatible.

Spur isolator unit
CSI350



Typical applications:

The spur isolator unit enables a spur of intelligent addressable devices to be connected to a main analogue loop. This simplifies the installation of remote parts of buildings or system extensions.

The CSI350 doesn't take an address in the number sequence.

Recommended no more than a zones worth of devices per isolator.

Shop monitor unit
MSU840



Typical applications:

The shop monitor unit is designed to allow small units with conventional fire systems to be fully integrated with a main intelligent addressable fire system.

It is ideal for connecting individual shop units into a main shopping centre system.

Recommended for use with conventional VADs **(see p76)**. Please note: A PSU **(see p38)** is required to operate conventional sounder circuits.

The MSU840 can have 2 sounder circuits, each with up to 0.3A of power.

3 channel I/O unit
CIO351



Typical applications:

The 3 channel input/output unit enables simple interfacing between the fire system and other equipment such as nurse call systems or access control systems. The inputs are fully monitored for open and short circuits.

Relay contacts are rated at 30V dc 1A. See below for further options.

Dimensions

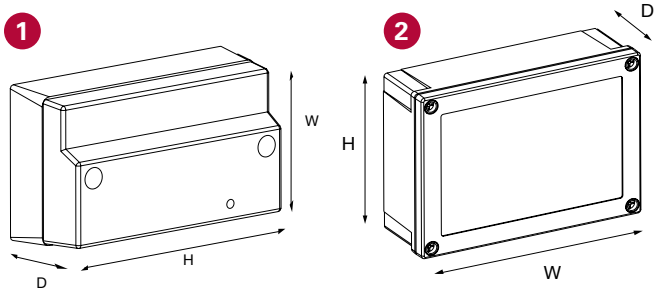

Description		H (mm)	W (mm)	D (mm)
Interface style 1	1	88	147	60
Interface style 2	2	129	180	60

Catalogue numbers

Description	Code
Zone monitor unit	CZMU352
Shop monitor unit	MSU840
Spur isolator unit	CSI350
3 channel input/output unit resets on reset (recognised as 1 address)	CIO351
230V ac relay unit	CMIO353

230V ac relay unit
CMIO353



Typical applications:

Enables simple interfacing between the fire system and other equipment such as nurse call systems or access control systems.

The ability of the output unit to switch 230V ac mains at 8A makes the unit ideal for plant control or mains powered door holders.

The input is monitored for open and short circuits therefore can be used for fire input applications such as monitoring sprinkler flow switches.

If you require higher current switching (10A) **please see page 80** for MAR724.

4 to 20mA interface
CGI420

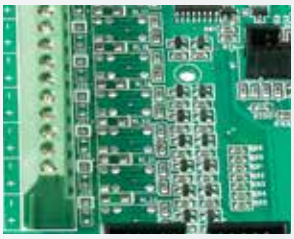

Typical applications:

Designed to interface with gas detection modules and are compatible with Eaton intelligent addressable control panels.

The supply to the gas detector is taken directly from the interface.



Features

	CZMU352/CSI350/ MSU840/CIO351	CMIO353
Ingress protection	IP40	IP65

Interfaces continued

4 way sounder controller unit
CSC354CPR



Typical applications:

The 4 way sounder controller unit (CSC354CPR) adds functionality to your addressable panel by powering up to 4 lines of conventional output devices.

The CSC354CPR gives access to Eaton's extensive range of conventional devices, including EN54-23 certified VADs, beacons, signboards, bells and sounders.

It is ideal in situations where there is a requirement for devices with a high current draw or where conventional sounder circuits are in a remote location away from the fire alarm control panel.

Dimensions

Description	H (mm)	W (mm)	D (mm)
4 way sounder controller Unit	300	300	74

Catalogue numbers

Description	Code
4 way sounder controller unit	CSC354CPR

Mimic relay boards
CIOP4 / CIOP8



Typical applications:

These addressable mimic relay boards (CIOP4) and (CIOP8) are 4 and 8 way soft addressing output modules, incorporating integral short circuit isolators.

The units are suitable for switching low voltage (24V dc at 1A maximum), via a set of latching relay contacts.

The flexibility of these modules is further enhanced by the fact that each output can be programmed for a range of triggers such as disablement, fault, fire, test panel, test zone prealarm, fire routing equipment, fire protecting equipment and reset with up to 16 different trigger sources per output.

These units have an additional 4 inputs which can initiate a reset, silence, evacuate and test function.

Dimensions

Description	H (mm)	W (mm)	D (mm)
CIOP4/8 mimic relay board	180	244	63

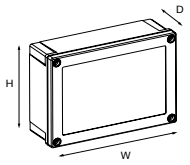

Mimic relay

Features

	CSC354CPR	CIOP4/CIOP8
Ingress protection	IP30	IP65

Catalogue numbers

Description	Code
4 way mimic relay board, 4 inputs, 4 outputs	CIOP4
8 way mimic relay board, 8 inputs, 8 outputs	CIOP8
4 to 20mA interface	CGI420

Interfaces continued

Fan controller unit
MFC6/MFC18





Typical applications:

MFC18 and MFC6 fan controller units work in conjunction with the Eaton's range of intelligent addressable control panels, providing the capability to control and display the status of AHU fans.

The units are connected to the control panel by means of the comms loop, utilizing only one address whilst providing the ability to monitor and control up to 18/6 AHU fans. Each MFC18 and MFC6 unit incorporates its own CPU specifically configured to control the relevant input and output logic making programming quick and easy using Eaton site installer software.

Recently upgraded to be compatible with new Smoke Management protocols. Both FC6 and FC18 are ideal for use in conjunction with updated CF3000 panels and the new MMOM-FC interface module.

Dimensions

Description	H (mm)	W (mm)	D (mm)
MFC6 Fan controller unit (surface mount)	125	155	42
MFC18 Fan controller unit (rack mount)	133	482	30

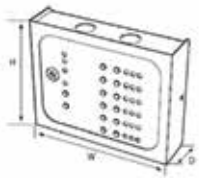

MFC6 Fan controller unit (surface mount)

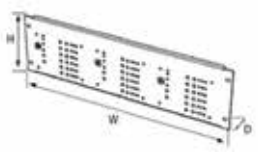

MFC18 Fan controller unit (rack mount)

Catalogue numbers

Description	Code
Fan controller unit (surface mount)	MFC6
Fan controller unit (rack mount)	MFC18

Micro interfaces

Whereas our standard interfaces are designed to be installed in the position required on the loop, our range of micro interfaces are compact enough to sit within a panels' enclosure, or in our dedicated mini module enclosure (ULBU) which can house up to 3 mini modules.







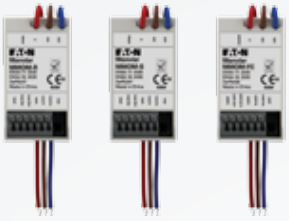

Micro zone monitor unit
MIU872

Typical applications:

The micro zone monitor unit (MIU872) is suitable for interfacing a zone of up to 20 conventional detectors onto an intelligent addressable control panel.

It will operate with any conventional detector in configuration with a schottky diode type base (CDBB300).

Micro single channel input unit
MMIM

Typical applications:

The micro single channel input unit (MMIM) is suitable for monitoring a set of normally open, volt free contacts such as sprinkler system flow switches and auxiliary panel fire/fault signals. Other examples include non-fire input signals such as flow valve open contacts, generator start up, fire door closed etc.

Micro single channel output unit
MMOM

Typical applications:

The micro single channel output unit (MMOM) is suitable for switching low voltage (24V dc at 1A maximum), via a set of non latching relay contacts.

It is also suitable for switching HVAC control circuits, plant shutdown control circuits, fire door closure etc.

Variants

The (MMOM-R) gives a 5 second pulse on reset, and is used for connecting/resetting beam detectors.

The (MMOM-S) is identified by the panel as a sounder and does not reset when put into 'silence' mode, only resets once panel has been reset.

The MMOM-FC is identified by the panel as sounder and will activate from its associate cause and effect programming. It will reset from a global reset not a global silence command. Suitable

for use with fan controller devices for smoke management.

Installation into mini module box

1. Fit the unit in position in accordance to the mounting diagram below.
2. Connect the unit according to standard connections.
3. Up to 3 units can be fitted inside a micro module box unit

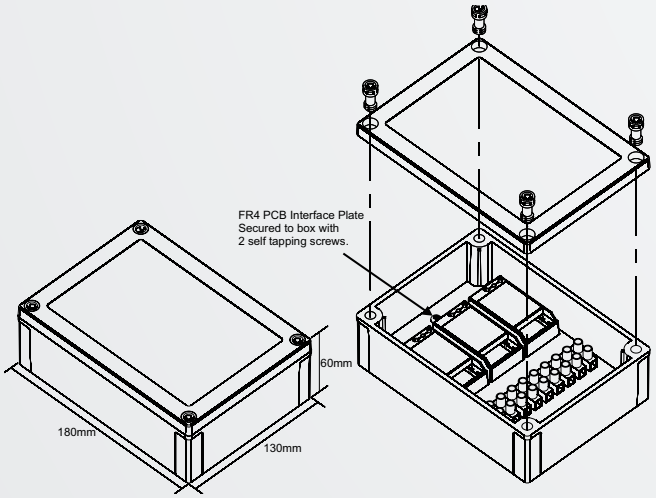

Features

	MIU872	MMOM	MMIM
Soft addressed	✓	✓	✓
Short circuit isolators	✓	✓	✓
Single address	✓	✓	✓
Ingress protection	IP40	IP40	IP40

Catalogue numbers

Description	Code
Micro zone monitor unit	MIU872
Micro single channel output unit	MMOM
Micro single channel output unit (sounder)	MMOM-S
Micro single channel output unit (reset on reset)	MMOM-R
Micro single channel input unit	MMIM
Mini module box unit (empty box)	ULBU

Network interfaces

Eaton offer multiple network interfaces which allow our panels and devices a wider variety of functionality. These network interfaces allow the connection of the Eaton network system to a computer network, and PC based applications such as site monitor, site graphic and web server.

Lon to RS232 adaptor
EC0232



Typical applications:

The EC0232 Lon to RS232 adapter allows connection of our system network (LonWorks) devices to PC based applications such as site monitor, site graphics and web server.

In addition to the standard adaptor, Eaton offer 2 variants for use with a HMX PA/VA system - the ECO232PAVA with no handshaking, and the EC0232PAVA3D with a 3 min time delay.

Dual-channel LonWorks BMS interface
EC200



Typical applications:

The EC200 dual-channel LonWorks BMS interface is an "add-on" to the network which translates the pre-configured network variables to a set of un-configured network variables which can then be bound to a BMS, giving full access to the fire network data.

TCP/IP interface
EC400



Typical applications:

The EC400 is a high performance, reliable and secure network infrastructure device for accessing Eaton Lon Network of intelligent addressable control panels over intranet or ethernet.

The EC400's built in configuration server manages up to 256 IP devices on 1 IP channel without a dedicated management PC.

Easy to understand diagnostic LEDs allow installers to install and troubleshoot the device without expert knowledge and dedicated troubleshooting tool.

Lon network booster
EC540



Typical applications:

The Lon network booster (EC540) is the solution to interconnect multiple EIA-709 channels.

This unit provides up to 5 ports and routes packets between these ports. In spite of its small size the (EC540) provides best class performance and flexibility in use.

In order to provide the optimal router configuration the (EC540) supports 2 to 5 ports as well as the 2 operating modes "smart switch mode" and "configured router mode".

Fibre optic multi-drop link - example network diagram

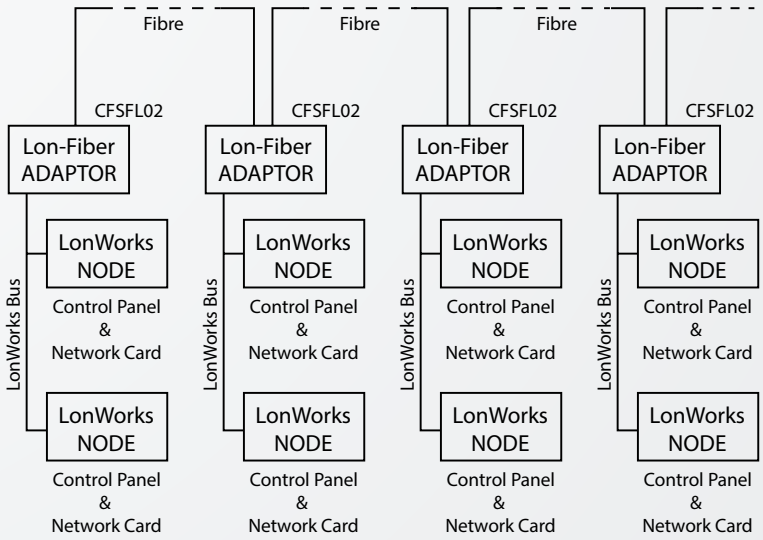

BACnet gateway
EC650B



Typical applications:

The BACnet gateway (EC650B) is a CEA- 709/BACnet gateway which maps CEA-709 network variables (NVs) to standard BACnet server objects. When ordered with this part code (EC650B), the LonWorks to BACnet address mapping is pre-loaded and ready for use with the the intelligent addressable CF3000 system interface board.

Modbus gateway
EC700



Typical applications:

The modbus gateway is part of the InfraLINK range of network infrastructure components from partners.

All of the modbus gateways feature a robust hardware platform with high performance CPU and UART for fast communications without loss of data. The LonWorks to modbus address mapping is pre-loaded and ready for use with the CF3000 fire system interface board.

Single mode Lon to fibre optic adapter
CFSFL01



Typical applications:

The single mode Lon to fiber optic adapter (CFSFL01) allows connection of the system network (LonWorks) devices through optical fibre, and to allow both point to point or multi drop topology.

Dual channel Lon to fibre optic adapter
CFSFL02



Typical applications:

The dual channel Lon to fiber optic adapter (CFSFL02) allows connection of the system network (LonWorks) devices through optical fibre, and to allow both point to point or multi drop topology.

Features

	EC400/EC540	EC700
Ingress protection	IP40 (IP20 screws)	IP20

Description	Code
Dual-channel lonworks BMS interface (non handshake)	EC200
Dual-channel lonworks BMS interface (self configuring for use with EC700)	EC200S
Lon to RS232 adapter	EC0232
Lon to RS232 adapter (For HMX pa/va system - no handshake)	EC0232PAVA
Lon to RS232 adapter (For HMX pa/va system - 3 min time delay)	EC0232PAVA3D
TCP/IP interface	EC400
Lon network booster	EC540
Bacnet gateway	EC650B
Modbus gateway	EC700
Single mode lon to fibre optic adaptor	CFSFL01
Dual channel lon to fibre optic adaptor	CFSFL02

Ancillaries

A range of ancillaries are available to complement and extend the capability of our existing hardware.

Loop splitter unit
ZPCB2222

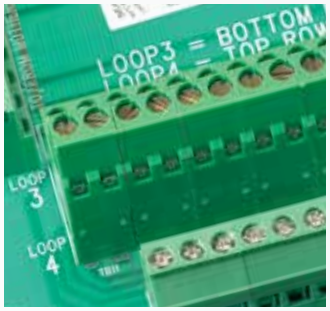

Typical applications:

Allows expansion of the DF6000 intelligent addressable panel from 4 to 16 loops.

This interface is mainly applicable in countries where the mixing of detectors, sounders, callpoints and interfaces are not permissible on the same loop or the number of devices per loop is limited to a small number.

Mimic PCB
ZPCB2252-MML / ZPCB2252-MSL

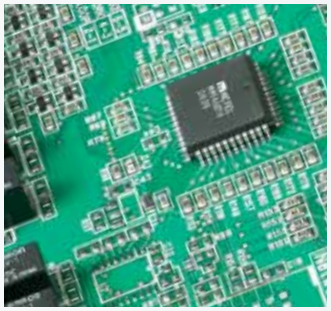

Typical applications:

Up to 250 outputs can be connected to the mimic PCBs (ZPCB2252MML) and (ZPCB2252MSL). This offers more capability to the extensive options already offered by the DF6000 control panel.

These boards are typical used for geographical LED mimic displays.

SPS Range -
SPS-2423
SPS-2433
SPS-2453



Typical applications:

Offers a compact, robust and versatile power solution to installers, allowing them to safely power fire detection and signaling systems in small to large installations.

Compact and discrete design allows for these SPS to be installed in a visible location such as a hotel lobby for instance.

Features

	SPS-2423/SPS-2433/SPS-2453
Ingress protection	IP30

Catalogue numbers

Description	Code
Loop splitter unit	ZPCB2222
Loop Mimic LED PCB (Master)	ZPCB2252-MML
Loop Mimic LED PCB (Slave)	ZPCB2252-MSL
Loop Mimic Relay PCB (Master)	ZPCB2252-MMR
Loop Mimic Relay PCB (Slave)	ZPCB2252-MSR
Safety power supply 24V / 1.5A (batteries not supplied)	SPS-2423
Safety power supply 24V / 2.5A (batteries not supplied)	SPS-2433
Safety power supply 24V / 4.5A (batteries not supplied)	SPS-2453

CE


Terminal D,E
Abflug Departures
Terminal A,B,C,Z
Terminal D,E
SOUTHAMPTON
LISSABON
ZUERICH
SANKT PETERSBURG
DELHI
LONDON-HEATHROW
TOKIO NARITA
PARIS-CH.DE GAULLE
LOS ANGELES-HOUSTON
PORTO
ATHEN
HONGKONG
HO CHI MINH CITY
BUKAREST
SANKT PETERSBURG
SAN FRANCISCO
OSAKA
BERLIN-TEGEL
REYKJAVIK
HELSINKI
TALLINN
ORLANDO
MOSKAU-SHEREMETYEVO
TORONTO
MEXICO CITY

Software

Eaton offer a number of specialised programs to aid with the installation, maintenance, functionality and servicing of our addressable systems. Installed using the USB analogue systems panel interface **(see p42)** and a PC or laptop, these software programs help to solidify our addressable systems' capabilities and make it easier for users to control and organise the system on their site.



Graphical visualisation software
EFGVS

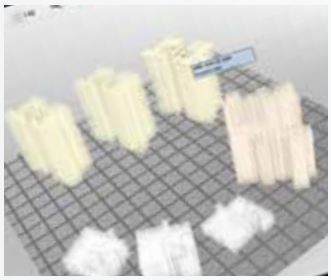

Typical applications:

Eaton Fire Graphic Visualisation Software (EFGVS) is a state of the art and powerful supervision management tool for Eaton Fire addressable systems.

Users can monitor, visualise in 2D and 3D, control and interrogate their systems to ensure alarms are located quickly and dealt with efficiently.

Ergonomic and intuitive, EFGVS includes a comprehensive list of advanced features offering the system designer and site supervisor a very efficient tool ensuring all information and controls be available at their fingertips.

Site monitor
SITEMONITOR



Typical applications:

Site monitor / webserver software is designed to monitor Eaton fire systems and allow quick PC based administration.

Using a simple interface, authorised users can view control panel event history, event status, device properties and other information depending on access permissions defined by the system administrator.

Catalogue numbers

Description	Code
Graphical Visualisation Software license 1-2 panels including an EC0232 interface	EFGVS1-2
Graphical Visualisation Software license up to 6 panels including an EC0232 interface	EFGVS3-6
Graphical Visualisation Software license up to 10 panels including an EC0232 interface	EFGVS7-10
Graphical Visualisation Software license above 10 panels including an EC0232 interface	EFGVS11-PLUS
Graphical Visualisation Software license up to 10 panels with TCP/IP interlink	EFGVS7-10-TCPIP
Graphical Visualisation Software license above 10 panels with TCP/IP interlink	EFGVS11-PLUS-TCPIP
Graphical Visualisation Designer Software license - no panel connectivity	EFGVS-DESIGN

Description	Code
Graphical Visualisation Premium Designer Software license including an EC0232 interface	EFGVS-PREMIUMDESGN
Interface to connect panel network (LONWorks) to PC (RS232)	EC0322
Site monitor / webserver software	EF-SITEMONITOR

All software products except SITEMONITOR include EC0232 (p36) as standard

Testing equipment

As well as offering complete fire systems, Eaton can also provide testing equipment to ease the process of installation, commissioning, maintenance and fault finding.

Loop tester kit
LP800KIT



Typical applications:

The loop tester kit is a hardware/ software combination that can be used to test, commission and fault find a loop of up to 200 intelligent addressable devices (sensors, sounders, ancillary devices) without having to connect the loop to the intelligent addressable control panel.

The loop tester is connected between the loop and PC, and allows the engineer to quickly identify and locate any loop device that is operating outside its operating conditions.

USB analogue systems panel interface
USBINT2



Typical applications:

The analogue systems panel interface is a universal serial bus converter that provides conversions from RS232 to USB, TTL to USB or TTL to RS232.

These options provide the connectivity required between a PC and intelligent addressable control panels, wireless control panels, and wireless survey tools including our range of software solutions (**see page 41**).

Addressable device programmer
CF800PROG



Typical applications:

The addressable device programmer is a versatile tool to aid the installation, commissioning, maintenance and servicing of current intelligent addressable devices and fire systems.

This unit is light, robust and easy to operate using a user friendly menu structure on 2 x 40 character LCD display. It is powered from a single PP3 size, heavy duty battery or an external supply.

CF800PROG can:

Program sensor modes **(see p22).**

Change address details

Change heat detector settings

Read analogue levels

Catalogue numbers

Description	Code
Loop tester kit	LP800KIT
Addressable device programmer	CF800PROG
USB panel interface	USBINT2



UL Systems

Underwriters Laboratories Inc. (UL) is an independent product safety certification organisation, established in 1894, to develop standards and test procedures for products, materials, components, assemblies, tools and equipment. Chiefly dealing with product safety it also evaluates and certifies the efficiency of a company's business processes through its magnificent system registration programs.

Since the launch of our UL Listed fire product range, several prestigious projects worldwide have been supplied including Hyatt Resort and Spa, Shangri-la at the Fort and Times Square projects in South East Asia and several major projects in the Middle East including a major projects within the prestigious Riyadh Financial District in the Kingdom of Saudi Arabia.

The Eaton UL range is designed to provide a solution for all sizes of project, from the simple small stand alone system to the large multi panel networked system with PA/VA and BMS integration.



Contents

UL listed fire systems range

Panels

ULDF6000 series panels **45**



Devices

Addressable sensors **47**



Conventional detectors **49**



Horns and strobes **51**



Pull stations **53**



Interfaces **55**



Micro interfaces **56**



SIGNALING
LISTED
4AC5
FIRE ALARM
EQUIPMENT

ULDF6000 series
UL listed control panels



ULDF6000RM (wall mount red metal)



ULDF6000 (wall mount graphite)

The ULDF6000 series panels are UL listed, high specification, wall or rack mounted fire panels. Combining sophisticated functionality with simple operation and aesthetically pleasing design, the panels are available in a number of loop configurations. Each panel is networkable with up to 126 other Eaton UL fire panels.

The control panel has the ability to support complex cause and effect programming. A wide range of user controllable functions make the system ideal for a diverse range of projects, from industrial applications through to large multi-site commercial developments.

Benefits

- Soft addressing
- Large versatile touchscreen user interface
- Integral printer (optional)
- Integral battery and power supply
- 2 x 12Ah batteries included
- Flexible distributed network capability
- Full range of compatible devices
- 4 notification appliance circuits (NACs) outputs
- 2 or 4 class A style 7 SLC loops
- PAS (Positive Alarm Sequence)

SIGNALING
UL LISTED
4AC5
FIRE ALARM EQUIPMENT

UL intelligent addressable systems
ULDF6000 series

Dimensions

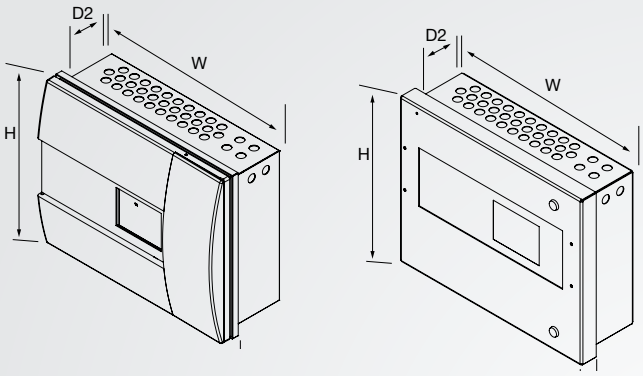

Description	H (mm)	W (mm)	D1 (mm)	D2 (mm)
ULDF6000	397	497	75	130
ULDF6000RM	398	505	48	118





Compatible repeater panels

The ULDF6000 has both a standard and a touchscreen repeater panel available. Ideal for larger sites, the repeater allows you to display the system information from multiple locations.





Features

	ULDF6000PR	ULDTPR6000
Active or passive option	×	✓
No programming required	✓*	✓
Multi language capability	×	✓
Allows networking with other Eaton fire panels	×	✓
Integral power supply	✓	✓
Ingress protection	IP30	IP40

*Except local text information



Catalogue numbers

Description	Code
2 loop panel	ULDF60002G
4 loop panel, integral printer	ULDF60004GP
2 loop panel, network card	ULDF60002GNC
4 loop panel, network card	ULDF60004GNC
4 loop panel, integral printer, network card	ULDF60004GPNC
2 loop panel, integral printer, red metal box	ULDF60002PRM
2 loop panel, network card, red metal box	ULDF60002NCRM
4 loop panel, network card, red metal box	ULDF60004NCRM
Loop connected passive repeater panel	ULDF6000PR
Touchscreen network repeater panel	ULDPTR6000

Sensors

Our UL range has multiple options for intelligent addressable sensors. All sensors are designed for optimum functionality in mid-large sized builds. They are all soft addressed and have integral short circuit isolators.

Addressable sensor base
UCAB300



Typical applications:

Specifically designed for use with all of our UL addressable sensors, the UCAB base will be used in all builds.

Optical smoke sensor
ULMAP320



Typical applications:

Suitable for most applications.

Fastest response to slow burning or smouldering fires which give rise to large visible smoke particles.

Photo-thermal sensor
ULMAPT340



Typical applications:

Responds quickly to fast clean burning fires.

Maintains the advantage of optical sensors when detecting smouldering fires.

Heat sensor
ULMAH330



Typical applications:

Environments where the ambient conditions might cause false alarms with smoke detectors.

Examples include areas with high levels of dust or fumes.



Sensor detail



Addressable base detail

Performance

Heat Class	ULMAP320	ULMAPT340	ULMAH330
Heat element rating	N/A	135°F	ROR + Fixed 135°F, Fixed 135°, Fixed 194°F
Heat detector spacing	N/A	50ft (heat alone operation)	50ft
Heat class	N/A	A2S	A2R

Dimensions

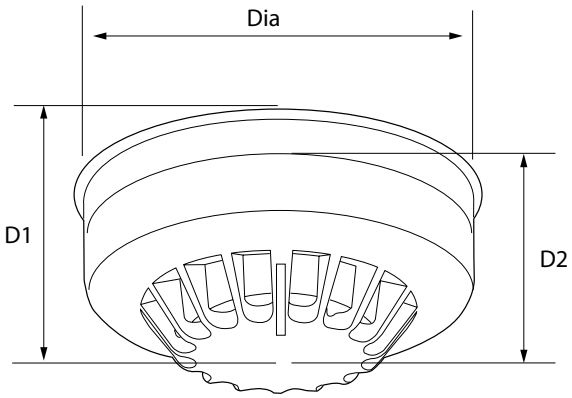

Description	Diameter (mm) (incl base)	Depth (mm) (excl base)	Depth (mm) (incl base)
Optical	104	33	45
Photo-thermal	104	43	55
Heat	104	43	55



Features

	ULMAP320	ULMAPT340	ULMAH330
Ingress protection	IP30	IP30	IP30

Catalogue numbers

Description	Code
ULMAP320 Optical smoke sensor	400005FIRE-0014X
ULMAPT340 Photo-thermal sensor	400006FIRE-0015X
ULMAH330 Heat sensor	400007FIRE-0016X
Addressable sensor base	UCAB300
Addressable sounder base	ULCAS380

Detectors

Our UL range has multiple options for conventional detectors. All detectors have a removable detector chamber and drift compensation. The range of detectors for different applications allow for all build requirements to be met.

As there is no UL certified conventional panel a ULMIU872 micro interface (p56) is required in conjunction with a UL intelligent addressable panel to use conventional detectors.

Optical smoke detector
UCPD-2W



Typical applications:

Suitable for most applications.

Fastest response to slow burning or smouldering fires which give rise to large visible smoke particles.

Photo-thermal detector
UCPT-2W



Typical applications:

Responds quickly to fast clean burning fires.

Maintains the advantage of optical sensors when detecting smouldering fires.

Fixed heat detector (135°F)
UCHT-2W



Typical applications:

Environments where the ambient conditions might cause false alarms with smoke detectors.

Examples include areas with high levels of dust or fumes.

Performance

Heat class	UCPD-2W	UCPT-2W	UCHT-2W
Heat element rating	N/A	135°F	135°F
Heat detector spacing	N/A	50ft (heat alone operation)	50ft
Mounting position	Ceiling in open areas	Ceiling in open areas	Ceiling in open areas

Features

	UCPD-2W	UCPT-2W	UCHT-2W
Ingress protection	IP40	IP40	IP40

SIGNALING UL LISTED



Conventional detector base
CB2E



Typical applications:

The CB2E has been specifically designed for compatibility with our UL range of conventional detectors. It can be be used in all builds with conventional detectors.

Dimensions

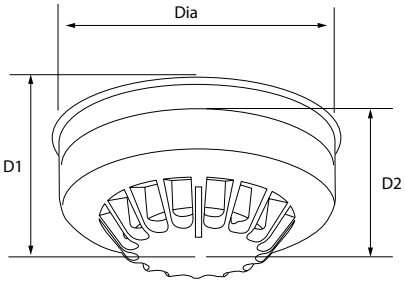

Description	Diameter (mm) (incl base)	Depth (mm) (incl base)	Depth (mm) (excl base)
Optical	104	45	33
Photo-thermal	104	55	43
Heat	104	55	43

Catalogue numbers

Description	Code
2 wire detector, optical	UCPD-2W
2 wire detector, opto-heat	UCPT-2W
2 wire detector, fixed heat 135°f	UCHT-2W
Standard detector base	CB2E

Horns and strobes

Our UL range incorporates a variety of audio and visual notification devices. Each device has up to 48% savings in current draw compared to similar products. The whole range is easy to install and has voltage test points for quick troubleshooting and easy spot checking, saving time on both installation and maintenance.

Wall mount horn
HNR



Typical applications:

The horns are ideal for retrofit jobs, limited space environments and pre-existing wire configurations.

Ceiling mount horn
HNWC



Typical applications:

The horns are ideal for retrofit jobs, limited space environments and pre-existing wire configurations.

Wall mount horn strobe/synchronised strobe
HSR/STR



Typical applications:

With the range of settings for both audio and visual purposes, these products are effectively 9 models in 1 appliance. With this functionality, and both ceiling and wall mount options available, it will meet almost any build requirements.

The synchronised option enhances both the sound and light output by keeping the outputs of multiple devices in sync.

Ceiling mount horn strobe/synchronised strobe
HSWC/STWC



Dimensions

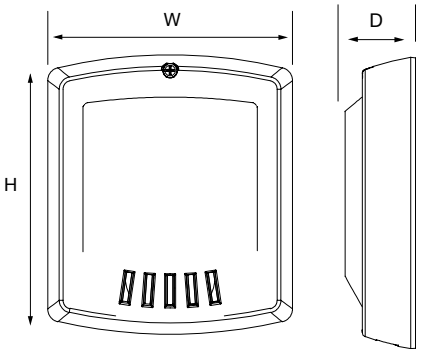

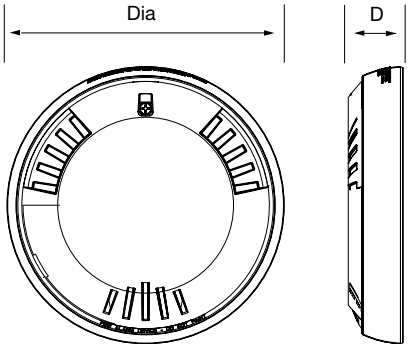

Description	H (mm)	W (mm)	D (mm)
Wall mount horn HNR	133	116	56
Wall mount horn strobe/synchronised strobe HSR/STR	131	131	110

Description	Diameter (mm)	Depth (mm)
Ceiling mount horn HNWC	166	34
Ceiling mount horn/ synchronised strobe HSWC	166	34

SIGNALING UL LISTED

UL intelligent addressable systems

Devices - horns and strobes



Wall mount outdoor synchronised strobe
RSSWP-2475W-FR



Ceiling mount outdoor synchronised strobe
RSSWP-2475C-FW



Typical applications:

The outdoor synchronised strobes are UL certified to meet adverse weather conditions. They are perfect for builds where outdoor indication is required.

These units use a universal, common mounting base making them ideal for retrofit jobs, limited space environments and pre-existing wire configurations.

Dimensions

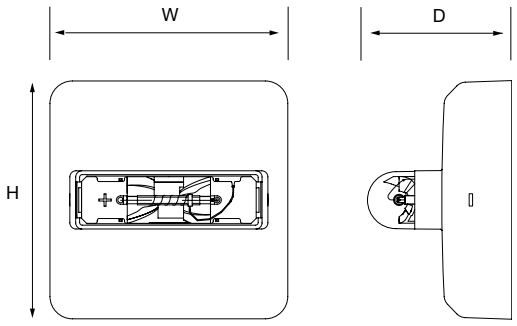

Description	H (mm)	W (mm)	D (mm)
RSSWP*	131	131	110

*Both wall mount and ceiling mount variants

Catalogue Numbers

Description	Code
HNR Wall mount horn	HNR
HNWC Ceiling mount horn	CN128972
HSR Wall mount horn strobe	HSR
HSWC Ceiling mount horn strobe	CN127464
STR Wall mount synchronised strobe	STR
STWC Ceiling mounted synchronised strobe	CN127488
RSSWP-2475W-FR Wall mount outdoor synchronised strobe	CN129013
RSSWP-2475C-FW Ceiling mount outdoor synchronised strobe	CN124446
WPSBB -R Exposed conduit, surface mount back box (RED)	CN109751
WPSBB-R + WP-KIT Concealed conduit surface mount back box (RED)	CN109751 + CN104486

Pull stations

The addressable pull stations are constructed of high quality, die cast metal for long lasting performance. The range consists of the UL listed MPS range of pull stations and the UL listed fast response input initiating module (ULMCIM-C).

Single action addressable pull station
UMPS-100/ UMPS-100WP



Typical applications:

Indoor/weatherproof pull station for use with addressable systems (UMPS-100/UMPS-100WP).

A dual action model is also available (UMPS-200, not shown), where the push bar rotates inward allowing the pull handle to be grasped in a one handed motion.

Single action conventional pull station
SG42BK2



Typical applications:

Cost effective conventional version of the single action pull station, must be used in conjunction with ULMIU872.
Back box ordered seperately.



Pull station detail

Dimensions

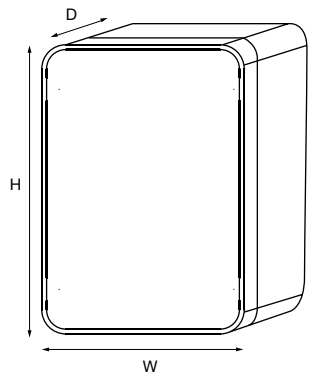

H (mm)	W (mm)	D (mm)
118	80	80

Catalogue numbers

Description	Code
Single action pull station, supplied with back box (addressable)	UMPS-100
Weatherpoof single action pull station	UMPS-100WP
Double action pull station	UMPS-200
Weatherproof double action pull station	UMPS-200WP
ULMIU872 Micro zone monitor unit	400025FIRE-0053X
ULMCIM-C micro single channel input unit (call point)	400014FIRE-0056X
Conventional single action pull station (back box ordered seperately)	SG42BK2
Conventional double action pull station (back box ordered seperately)	SG42BK1
Indoor Back box for conventional, surface mounting	SGB32S
Weatherproof Back box for conventional, weatherproof	SGB-32C

SIGNALING UL LISTED



Interfaces

We supply an extensive range of interfaces to support our UL control panels. Interfaces allow for a wide variety of installations to be simplified without the use of specialist or customised equipment. For assistance deciding which interfaces will benefit you the most, contact our technical support team; **firetechsupport@eaton.com**

4 Way Sounder Controller Unit
ULCSC354



Typical applications:

The unit connects 4 lines of conventional output devices on a single address to an addressable panel. Ideal for when specialist devices with a high current draw are required, such as Eaton's UL ceiling and wall horns/strobes. Or where conventional sounder circuits are in a remote location away from the fire alarm control panel.

Shop monitor unit
ULCSUM355



Typical applications:

The shop monitor unit is designed to allow small units with conventional fire systems to be fully integrated with a main intelligent addressable fire system.

It is ideal for connecting individual shop units into a main shopping centre system.

Spur isolator unit
ULCSI350



Typical applications:

The spur isolator unit enables a spur of intelligent addressable devices to be connected to a main analogue loop. This simplifies the installation of remote parts of buildings or system extensions.

3 channel I/O unit
ULCIO351



Typical applications:

The 3 channel input/output unit enables simple interfacing between the fire system and other equipment such as nurse call systems or access control systems. The inputs are fully monitored for open and short circuits.

230V ac relay unit
ULCMIO353



Typical applications:

Enables simple interfacing between the fire system and other equipment such as nurse call systems or access control systems.

The ability of the output unit to switch mains also makes the unit ideal for plant control or mains powered door holders.

The input is monitored for open and short circuits so can be used for fire input applications such as monitoring sprinkler flow switches.

Dimensions

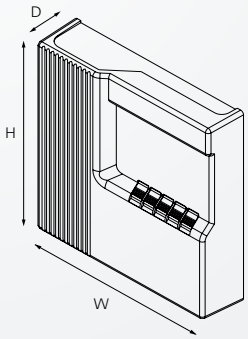

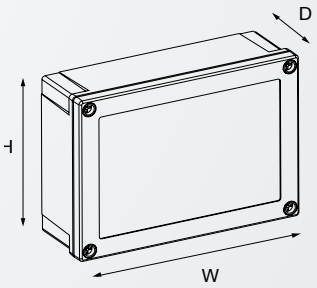

Description	H (mm)	W (mm)	D (mm)
Interface units	129	180	60
4 way sounder controller unit	300	300	74

Features

	ULCSC354	ULCSUM355 /ULCSI350/ ULCIO351/ULCMIO353
Ingress protection	IP30	IP40

SIGNALING UL LISTED

Micro interfaces

Whilst our standard UL interfaces are designed to be installed in the position required on the loop, our range of micro interfaces can sit within a panels' enclosure.

Micro single channel output units
ULMCOM/ULMCOM-S



Typical applications:

The Micro Single Channel Output Unit (ULMCOM) is suitable for switching low voltage (24V dc at 1A maximum), via a set of non latching relay contacts.

It is also suitable for switching HVAC control circuits, plant shutdown control circuits, fire door closure etc.

The ULMCOM-S is identified by the panel as a sounder.

Micro single channel input units
ULMCIM/ULMCIM-C



Typical applications:

The Micro Single Channel Input Unit (ULMCIM) is suitable for monitoring a set of normally open, volt free contacts such as sprinkler system flow switches and auxiliary panel fire/fault signals. Other examples include non-fire input signals such as flow valve open contacts, generator start up, fire door closed etc.

The ULMCIM-C is identified by the panel as a call point and is designed for use with pull stations.

Micro zone monitor unit
ULMIU872



Typical applications:

The Micro Zone Monitor Unit (ULMIU872) is suitable for monitoring a zone of up to 20 UL approved conventional detectors.

Dimensions

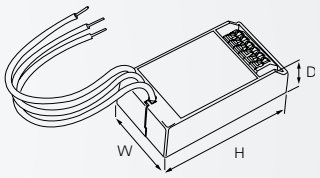

H (mm)	W (mm)	D (mm)
65	35	18.5

We offer an enclosure for our micro interfaces, **see p36.**

Features

	ULMCOM/ ULMCOM-S	ULMCIM/ ULMCIM-C	ULMIU872	ULMIU872	ULBU
Ingress protection	IP40	IP40	IP40	IP40	IP40

Catalogue numbers

Description	Code
4 - Way sounder controller unit	ULCSC354
Shop monitor unit	ULCSUM355
Spur isolator unit	ULCSI350
3 Channel input/output unit resets on reset	ULCIO351
120V/230V ac relay unit	ULCMIO353
ULMIU872 Micro zone monitor unit	400025FIRE-0053X
ULMCOM Micro single channel output unit (recognised as output unit)	400015FIRE-0059X

Description	Code
ULMCOM-S Micro single channel output unit (recognised as sounder)	400016FIRE-0062X
ULMCIM Micro single channel input unit (recognised as input unit)	400013FIRE-0050X
ULMCIM-C Micro single channel input unit (recognised as callpoint)	400014FIRE-0056X
Mini module box unit (empty box)	ULBU

SIGNALING UL LISTED





Contents

Conventional fire systems

Conventional fire system panels

EFCV8 series panel **59**



FXP2200 series panel **61**



CF5000 series panel **63**



EFCDP series panel **65**



Conventional devices

Detectors and indicators **67**



Bases **70**



Beam Detectors **70**



Duct probe detector **71**



Callpoints **72**



Bells **73**



Sounders **74**



Visual alarm devices **76**



Indicators **78**



Sounder indicators **79**



Door retainers **80**



Auxiliary power supply **81**



EFCV8Z
Conventional control panel



Eaton's 8 zone conventional fire system panel delivers a straightforward, intuituve interface that makes programming and maintenance simple.

Approved to EN54-2&4, it offers a comprehensive set of functionalities in a modern, robust and discrete enclosure. It's appearance and performance makes the panel well suited for life safety notification in a wide variety of small to medium sized buildings, particularly schools, warehouses, retail stores and office buildings.

With the addition of an isolator barrier the panel has the additional flexibility to monitor standard or intrinsically safe conventional zone circuits, making it suitable for industrial applications.

	EFCV8ZONE
No. of zones	8
Detectors per zone	32
Maximum loading per zone	32mA
Repeater Port	✓
No. of sounder circuits	4
Maximum loading per sounder circuit	250mA
Ingress protection	IP30

Benefits

- Zones switchable between standard conventional and intrinsically safe zones (using isolator barrier)
- One man test facility
- Class change input
- Interlink relay functionality for connecting 2 panels together
- Interlink relay allows for greater system flexibility
- Supports an expansion card for Fire Routing Equipment, Fire Protection Equipment and fire relays per zone
- Modern and discreet enclosure

Conventional systems
EFCVSeries



Dimensions

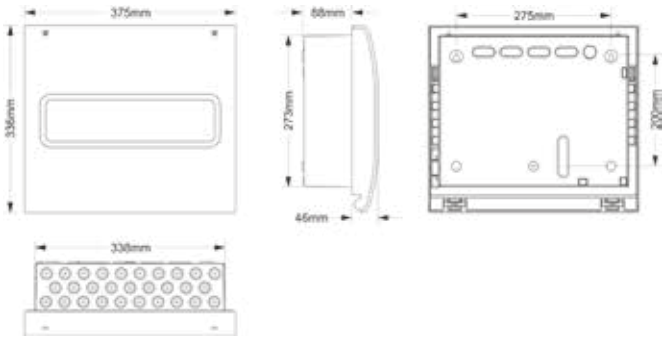

	H (mm)	W (mm)	D (mm)
Complete Panel	336	375	134
Back Box	273	338	88

Catalogue numbers

Description	Code
8 Zone Conventional Panel	EFCV8Z
End of Line Module	EOLM-1

FX2200CPD series
Conventional control panel

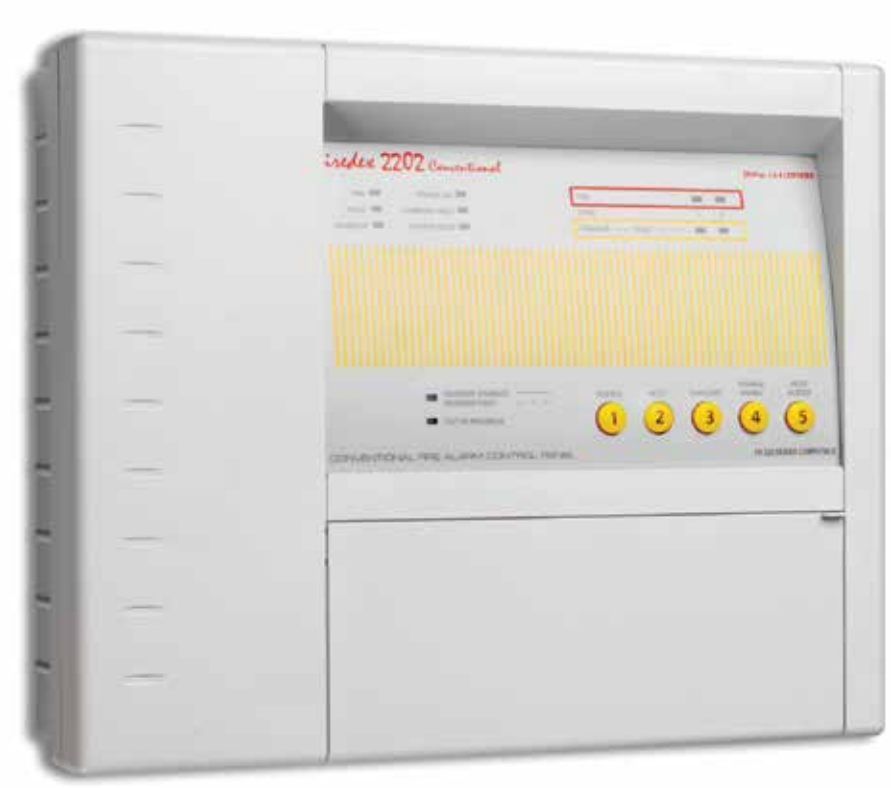

"A flexible conventional solution that ensures ease of use and high reliability"

The FX2200CPD range of conventional control panels provide a solution to any conventional system requirement. The advanced features include a simple "one-shot" user test facility, class change contacts, battery voltage alarms and charger temperature compensation, all included as standard to ensure ease of use and high reliability.

Attention to detail is emphasised by the neat log book holder feature, allowing essential records to be stored close to hand, ready for quick reference. For larger installations, custom configuration of the panels offers even greater flexibility, allowing project specific requirements to be easily met, in a competitive and cost effective package.

Benefits

- Compact design
- Surface or semi-flush mounting
- Numerical access code (no lost keys)
- 2 or 4 zones panels
- Flexible, high specification system
- Simple "one-shot" auto-reset user test facility
- Maintenance free poly switch circuit protection, with auto reset

	FX2202	FX2204
No. of zones	2	4
Detectors per zone	32	32
No. of alarm circuits	2	2

	FX2202	FX2204
Ingress protection	IP30	IP30

Compatible Repeater Panel

To complement the FX2200 range a repeater panel is available for connection to the 4 zone control panel. Specifically designed for ease of installation, it requires only 2 interconnecting wires from the main panel, saving material cost and labour time. Further repeater panels can be cascaded which does not affect standby time as each has its own mains supply and standby battery. The repeater displays all the same functions as the main panel and includes an indicator test facility.



Features

- Charger with built in temperature compensation
- Displays essential information at other key locations in a large building/site
- Zone fire and fault conditions
- Test mode in operation
- Zones or alarm lines in disabled mode

Dimensions

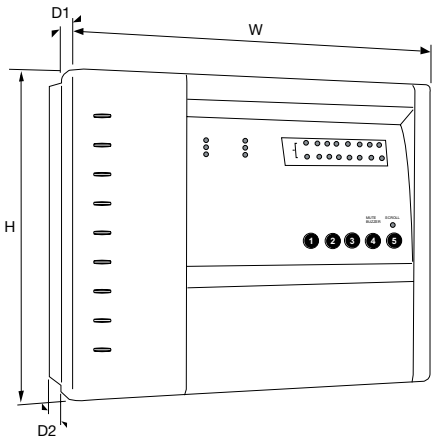

	H (mm)	W (mm)	D1 (mm)	D2 (mm)
2 / 4 zone panel	270	332	45	47
Cut-out	265	327	-	-

Note: If surface mounting add D1 and D2 to obtain depth dimension

Catalogue numbers

Description	Code
Conventional 2 Zone Panel	FX2202CPD
Conventional 4 Zone Panel	FX2204CPD
Conventional Repeater Panel	FXRP2200
Steel Back Box (for use with FX2202/4/8)	FX22003300 MB
Fire Alarm System Log Book	MFALOG

CF5000 series
Conventional control panel



"Contemporary and compact panel design that provides a solution to any conventional system requirement"

The new CF5000 conventional control panel is currently available in a 16 zone version. The panel features an array of user friendly features and are available at very competitive prices. The attractive flush or surface mountable plastic enclosure, with metal back box, has been designed through intensive voice of the customer research to provide ample space for termination of cables.

	CF50016
No. of zones	16
Detectors per zone	30
No. of alarm circuits	4
Zonal relay card	✓
Ingress protection	IP30

Benefits

- Zonal relay card as standard
- One man test facility
- Non latching zone feature
- Class change input
- Fire and fault relays
- Discreet enclosure
- Supplied complete with battery for 24 hour standby

Conventional systems
CF5000 series



Dimensions

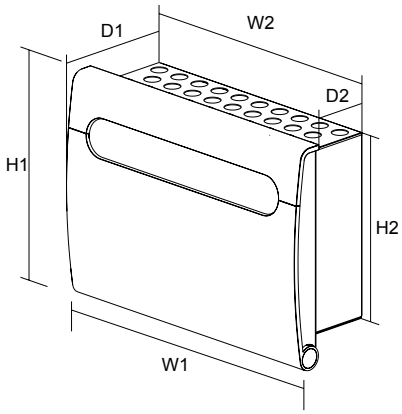

Description	H1 (mm)	W1 (mm)	D1 (mm)	H2 (mm)	W2 (mm)	D2 (mm)
	Total height	Total width	Total depth	Back box height	Back box width	Back box depth
16 Zone	276	375	136	232	335	96

Catalogue numbers

Description	Code
16 zone control panel	CF50016
Fire alarm system log book	MFALOG

EFCDP



NEW PRODUCT

The Eaton Fire EFCDP EN54 compliant conventional panel series is designed to provide simplicity and reliability to end users.
Available with 2, 4 or 8 zones, this easy to install panel provides ease of access through its spacious interior ensuring plenty of room for wiring and battery change. It comes with a 1.25 Amp 27V power supply and includes space for 2 x 3.2 Ah sealed lead acid batteries. Battery management is fully monitored through the system. Fire and fault voltage-free relays and a class change input are included.
Activation of the panel is carried out via access code.

	EFCPD
No. of zones	2, 4, 8; EOLR = 6K8
Detectors per zone	30
Power supply	Switch mode 1.25A/27Vdc
Monitored sounder outputs	2
Alarm load	800mA (shared)
Cable entry	13 entries, 20mm diameter knockouts
Max battery size	2 x 3.2Ah, 12V, SLA
Complaince	EN54 Parts 2 and 4

The panel features soft tactile colour coded buttons to facilitate control and programing, and is easily tested through one man walk tests – reducing maintenance costs for the end-user.
The panel is compliant with European standards EN54-2 & 4, Fire Detection and Alarm Systems - Control & Indicating Equipment, and carries an LPCB mark.

Benefits

- Easy to install and maintain
- One-man test facility
- Compatible with Eaton D200 detector series
- Up to 30 detection devices per zone
- Secured with code entry for activation of controls
- Test with or without sounders in test mode
- Ease of programming with colour coded, soft tactile buttons
- Modern and compact enclosure

Conventional systems
EFCDP series



Dimensions

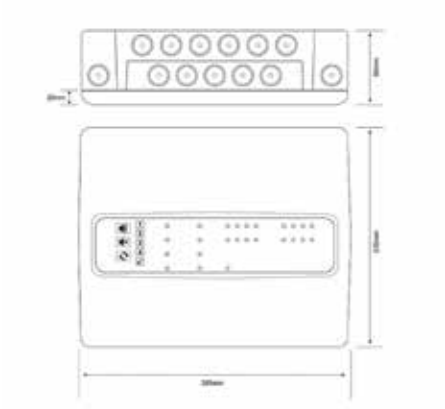

	H (mm)	W (mm)	D (mm)
Back Box	235	287	60
Lid	235	285	20
Total depth (back box + lid fitted)			80

Catalogue numbers

Description	Code
EFCDP Conventional Detection Panel 2 zones	EFCDP2Z
EFCDP Conventional Detection Panel 4 zones	EFCDP4Z
EFCDP Conventional Detection Panel 8 zones	EFCDP8Z

Detectors and remote indicator

The conventional range offers a multi-mode, 5 in 1 detector (FXN922), covering many building needs. It's quick and simple to install with a stylish low profile design. The detector is mounted on our standard conventional base (EFXN520). Each detector is fitted with a 360˚ viewable LED for indication.

This multi-mode detector can be configured to operate as either an optical detector, photo-thermal detector or 1 of 3 heat detector modes (A1R, BS, CS) using the four position switches located at the back of the detector. The FXN922 is certified for use in all 5 modes.

Compatible with panels EFCV8, FXP2200, CF5000.

Multimode detector
FXN922



Base not included. See p70 for compatible bases.

Optical smoke detector mode

Typical applications:

Suitable for most applications.

Fastest response to slow burning or smouldering fires which give rise to large visible smoke particles.

Photo-thermal detector mode

Typical applications:

Responds quickly to fast clean burning fires.

Maintains the advantage of optical sensors when detecting smouldering fires.

Rate of rise heat detector mode

Typical applications:

Environments where the ambient conditions might cause false alarms with smoke detectors.

Examples include areas with high levels of dust or fumes.

Fixed heat detector (77°) mode

Typical applications:

Environments where a change in temperature is a likely occurrence. Using a fixed heat negates false alarms from insignificant temperature rises.

Fixed heat detector (92°) mode

Typical applications:

Environments where the ambient heat levels are likely to be above normal temperatures, such as restaurant kitchens.

Note:

We can also supply separate detectors for each individual mode if they are required. These are displayed in the catalogue numbers in the table over the page.

Remote indicator
DIR301



Typical applications:

The remote indicator is ideal for applications such as void spaces or outside locked or inaccessible rooms to provide indication of the activation of an automatic detector.

Dimensions

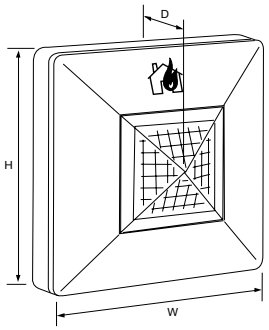

Description	H (mm)	W (mm)	D (mm)
Remote indicator	87	87	49

Performance

Feature	Optical smoke mode	Photo-thermal mode	Rate of rise mode	Fixed heat 77 ˚C mode	Fixed heat 92 ˚C mode
Area coverage (subject to local standards)	100m^2	100m^2	50m^2	50m^2	50m^2
Heat class	N/A	A2S	A1R	BS	CS
Alarm temperature	N/A	60 ˚C	60 ˚C	77 ˚C	92 ˚C

Dimensions

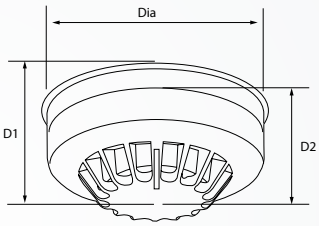

Description	Diameter (mm) (incl base)	Depth (mm) (incl base)	Depth (mm) (excl base)
Multimode detector*	104	42	55
Optical smoke detector	104	33	45
* All other conventional detectors share same dimensions			

Switch settings

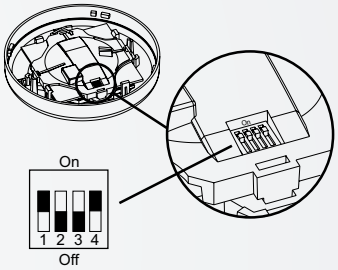

Description	SW1	SW2	SW3	SW4
Optical mode	-	OFF	OFF	OFF
Photo-thermal mode	-	OFF	OFF	ON
Rate of rise mode	-	ON	OFF	OFF
Fixed heat 77° mode	-	OFF	OFF	ON
Fixed heat 92° mode	-	ON	ON	OFF



	5 in 1/MPD821/ MPT951/MFR830/ MMT860/MHT890	FX251D/CIR301WP
Ingress protection	IP40	IP30

Catalogue numbers

Description	Code
5 in 1 Multi-Mode Detector FXN922	400017FIRE-0031X
Optical Smoke Detector	EFXN533
Photo-Thermal Detector	EFXN632
Rate of Rise Heat Detector	EFXN525
Fixed Heat Detector 77 ˚C	EFXN524
Fixed Heat Detector 92 ˚C	EFXN526
Remote Indicator	DIR301
Weatherproof Remote Indicator	CIR301WP

Detectors for EFCDP panel range

The D200 conventional detector range offers a multipurpose offering for both smoke and heat detection. The range includes optical, heat and multi-sensor detectors suitable for applications within two-wire conventional systems and addressable systems suitable for conventional detectors.

The detectors provide fire detection and alarm system designers with a standard compliant economical product for life safety and property protection.

Optical smoke detector
D200-O



Typical applications:

Suitable for most applications.

Early detection of fire and high immunity against unwanted alarms.

Multi-sensor detector
D200-HO



Typical applications:

Ideal for both fast-flaming and slow smouldering fires.

Dual purpose detector to detect smoke, heat or a combination, supported by high immunity against unwanted alarms

Heat detector
D200-H



Typical applications:

Environments where the ambient conditions might cause false alarms with smoke detectors.

Examples include areas with high levels of dust or fumes.

Performance

	D200-O	D200-HO	D200-H
Alarm current (max)	40mA	50mA	50mA
Alarm response threshold (smoke)	N/A	0.08 - 0.15 dB/m	
Alarm response threshold (heat)	N/A	590c static andrate of rise	590c static and rate of rise

Dimensions

Description	D200-O	D200-HO	D200-H
Dimensions (mm) excluding contacts	102 x 34	102 x 45	99 x 45

Catalogue numbers

Description	Order code
D200-HO two-wire multi-sensor detector	400020FIRE-0034X
D200-O two-wire optical smoke detector	400019FIRE-0033X
D200-H two-wire heat detector	400018FIRE-0032X

Note: products must be ordered in multiples of 8 pcs

Bases

There are two types of conventional detector bases, compatible with our range of detector heads to provide a wide functionality for different applications. The standard base (EFXN520) is a general use product, providing a foundation for our conventional detectors, whereas the relay base (FXN520R) provides a local relay signal in the event of its host detector being triggered, making it ideal for instigating a local response.

Note: Bases not compatible with D200 conventional detector range.

Standard base
EFXN520



Typical applications:

General use product, suitable for use in most indoor applications.

Relay base
FXN520R



Typical applications:

Areas where a local response is required.



Dimensions

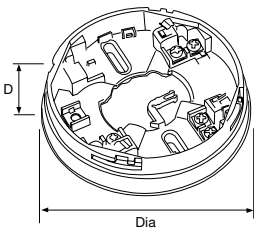

Standard base

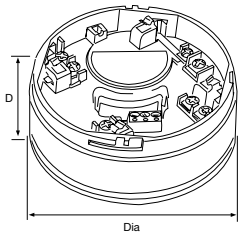

Relay base

Description	Dia (mm)	D (mm)
Standard base	104	22
Relay base	102	40

Catalogue numbers

Description	Code
Standard base	EFXN520
Relay base	FXN520R

Duct probe detector

The presence of smoke in a ventilation duct is detected by sampling the airflow through the duct via two sampling tubes. An optical detector and base are mounted within the sampling chamber, which is located on the external skin of the duct, with sample and exhaust probes passing into the duct in an area of low turbulence.

Duct probe unit
MDP201





Duct probe unit shown with optical detector - **detector and base must be ordered separately.**

Typical applications:

Detecting presence of smoke in ventilation ducts.

Features

Duct width range	300mm to 1500mm 5 to 50 metres
Duct air speed range	1m/s to 20m/s Detector ± 0.8˚ Prism ± 5.0˚
Temperature range	-20°C or +60°C
Ingress protection	IP67

Catalogue numbers

Description	Code
Duct probe unit	MDP201



Duct probe units can be used to detect the presence of smoke in a ventilation duct

Callpoints

Two versions of the conventional callpoint are available, the surface or flush mounted MBG914 or the weatherproof MBG917. Both have an integral short circuit isolator and are very simple to install. The callpoints are packaged with 2 frangible glass elements and test key, with a comprehensive range of further devices available.

Surface/flush mounted callpoint
MBG914



Typical applications:

General use product, suitable for use in most indoor applications.

Weatherproof callpoint
MBG917



Typical applications:

Builds requiring a callpoint in harsh conditions. For example, outside or in a wash down area.

Dimensions

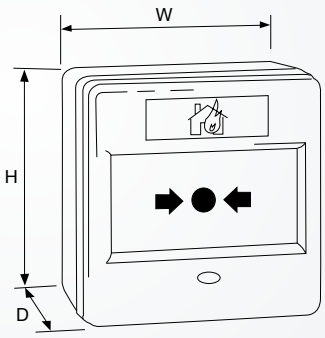

Description	H (mm)	W (mm)	D (mm)
Surface mounted	87	87	57
Flush mounted	87	87	36
Weatherproof	87	87	59

Features

	MBG914	MBG917
Fast fit clip	✓	✓
Heavy duty terminals	✓	✓
Ingress protection	IP42	IP65

Catalogue Numbers

Description	Code
Surface/flush callpoint	MBG914
Weatherproof callpoint	MBG917
Protective hinged cover (pack of 10)	CXPC
Recessing bezels (pack of 10)	MBGBEZ
Resettable element kit (pack of 10)	MBGREKIT
Spare break glasses (pack of 10)	FX5G
Earth continuity links (pack of 5)	MBG119
Callpoint keys (pack of 10)	MFBGKEY3

Further accessories:



Callpoint shown with protective hinged cover

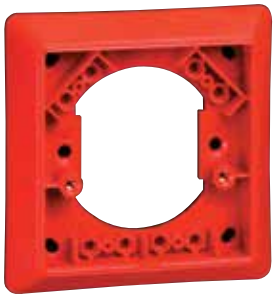

Callpoint recessing bezel

Bells

Bells still remain a popular choice for many applications where they can sometimes be used as a signal for non-fire purposes, such as class change in a school.


Bells can be used for non fire applications such as class change in a school

Internal 6 inch bell
MBM246



Typical applications:

Can be used for non-fire applications, such as class change in a school.

Dimensions

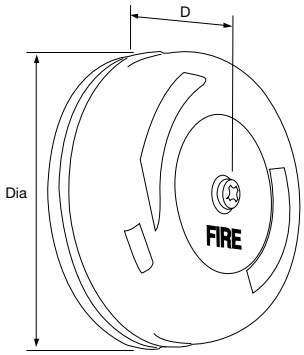

Internal 6 inch bell

Description	Dia (mm)	D (mm)
6 inch internal bell	152	63

Sound output

	MBM246	MWB824
Sound Output	93-95dB(A) at 24V dc	95dB(A) (+/-2)

Features

	MBM246	MWB824
Ingress protection	IP21C	IP54

Catalogue numbers

Description	Code
Internal 6 inch bell	MBM246
8 inch weatherproof bell	MWB824

Sounders

We have an extensive range of conventional sounders, designed to meet every specification's functional and aesthetic needs. Completely EN54 Pt. 3 certified, each sounder offers a unique solution to your conventional system requirements.

Flush sounder
MFS324



Typical applications:

Ideal for retail, hotel and residential applications such as sheltered housing.

Surface sounder
MWS424SB



Typical applications:

This all-purpose sounder has been designed to be both robust and aesthetically pleasing to meet many build requirements.

Weatherproof surface sounder
MWS424DB



Typical applications:

The weatherproof sounder is perfect for harsh weather conditions where a sounder is needed. With selectable tones a high volume can be easily achieved meaning this sounder functions well in outdoor settings.

High output wall sounder
FX007



Typical applications:

With a maximum output of 120dB(a), this sounder is ideal for areas with high ambient noise levels like warehouses.

Low current wall sounder
MLC624



Typical applications:

Designed to provide a high sound output with a low current consumption the MLC624 is perfect for areas where high sound levels need to be achieved but sounder circuit capacity is limited.

Base mountable sounder
MDS824



Typical applications:

With a slim and aesthetically pleasing design this base sounder is ideal for applications such as hotel bedrooms where a detector/sounder or a detector/sounder-beacon is required.

Please note a detector base is still required when used in conjunction with a detector

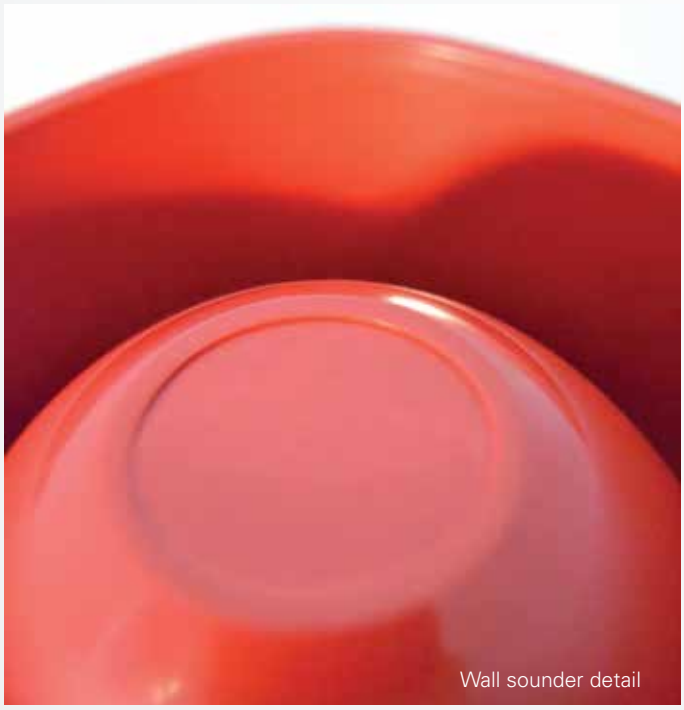

Wall sounder detail

Sound output

	MFS324	MWS424	FX007	MLC624	MDS824
Sound output	98dB(a) at 1 Metre (+/-2)	105dB(a) max (+/-2) at 24V dc	120dB(a) (+/-2) Max at 1m (tone 5) 114dB(a) (+/-2) Max at 1m (tone3)	100dB(a) at 24V dc	80/90dB(a) (+/-3) @ 1 Metre
Tones	32	32	32	3	8

Dimensions

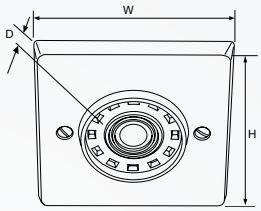

Flush sounder

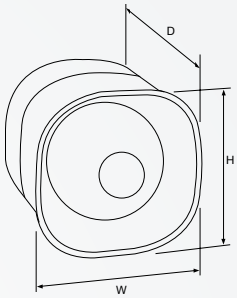

Wall sounder

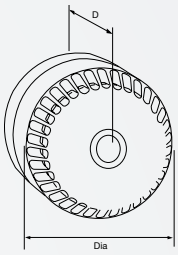

Surface sounder

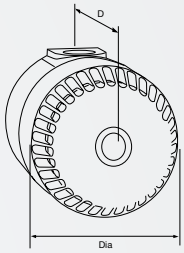

Weatherproof surface sounder

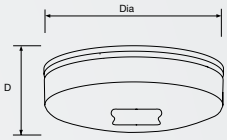

Base mountable sounder

Description	H (mm)	W (mm)	D (mm)
Flush sounder	86	86	36
High output wall sounder	105	105	95
Low current wall sounder	105	105	95

Description	Dia (mm)	D (mm)
Surface sounder	93	63
Weatherproof surface sounder	93	93
Base mountable sounder	111	26

Features

	MFS324/ MFS324W	MWS424SB	MWS424DB
Ingress protection	IP20	IP54	IP65

	FX007	MLC624	MDS824
Ingress protection	IP42	IP30	IP65

Catalogue Numbers

Description	Code
Flush sounder, red	MFS324
Flush sounder, white	MFS324W
Low profile surface sounder, red	MWS424SB
Weatherproof deep base surface sounder back box, red (IP65)	MWS424DB
High output wall sounder	FX007
Low current wall sounder	MLC624
Base mountable sounder	MDS824
Blanking plate for MDS824 (pack of 5)	MDS824COV



Visual alarm devices (VADs)

From 31st December 2013 a new beacon standard, EN 54-23 became mandatory throughout the EU where Construction Product Regulation (CPR) applies. It directly affects the use of visual alarm devices (VADs) in fire detection and alarm systems for non-domestic premises. Its purpose is to standardise the requirements, test methods and functional criteria of VADs to ensure that their visual performance is measured and presented in a uniform manner.

Eaton's LX range has been designed to comply with the new EN 54-23 standard. With current consumption as low as 10mA, the range has been developed to provide the lowest current consumption with the highest possible coverage. Three years in the making, the LX range, available for wall and ceiling applications, features a number of patented technologies including an innovative lens and flash pattern.

Solista LX wall
MFSOLWRS



Typical applications:

With both a shallow base and deep base option the Solista meets requirements of a large range of builds.

Solista LX ceiling
MFSOLCWS



Typical applications:

The ceiling option Solista helps to cover different types of room sizes to meet the requirements of the CoP 0001 design guidelines.

RoLP LX wall
MFROLPWR



Typical applications:

The RoLP LX Wall is ideal for dual use applications where a visual alarm device is required in addition to an audible alarm.

The RoLP LX Wall is available to use with any standard RoLP sounder.

Symphoni LX wall
FXSYG1WR



Typical applications:

The Symphoni LX Wall base can be used in combination with any standard Symphoni sounder.

Its high sound output makes it suitable for open areas or areas where there is higher than normal background noise.

Symphoni LX WP wall (weatherproof)
FXSYG1WR-WP

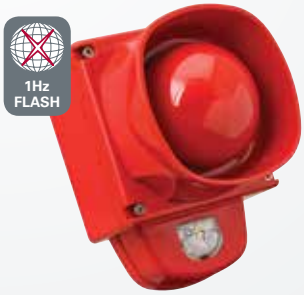

Typical applications:

The Symphoni LX WP Wall device offers a weatherproof alternative to the Symphoni LX Wall device. With an ingress protection rating of IP66, it is suited for wet and outdoor environments.

These products are all **red flash**, for more options please contact:

firetechsupport@eaton.com

Performance

	Solista LX wall	Solista LX ceiling	RoLP LX wall	Symphoni LX wall	Symphoni LX WP wall
Sound output	N/A	N/A	102dB(A) (Typical tone 3 - RoLP)	100dB(A) (Typical tone 3 - Symphoni)	100dB(A) (Typical tone 3 - Symphoni)
Minimum current consumption	10mA	10mA	22mA	15mA	15mA
EN54-23 coverage reference	W-2.4-7.5	C-3-7.5	W-2.4-7.5	W-2.4-7.5	W-2.4-7.5
Coverage volume	135m^3 (15m^3)	132m^3 (21m^3)	135m^3 (15m^3)	135m^3 (15m^3)	135m^3 (15m^3)
Flash rate	1Hz (switchable to 0.5Hz)	1Hz (switchable to 0.5Hz)	1Hz (switchable to 0.5Hz)	1Hz (switchable to 0.5Hz)	1Hz (switchable to 0.5Hz)
Ingress protection	IP33C	IP33C	IP65	IP21C	IP66

Dimensions

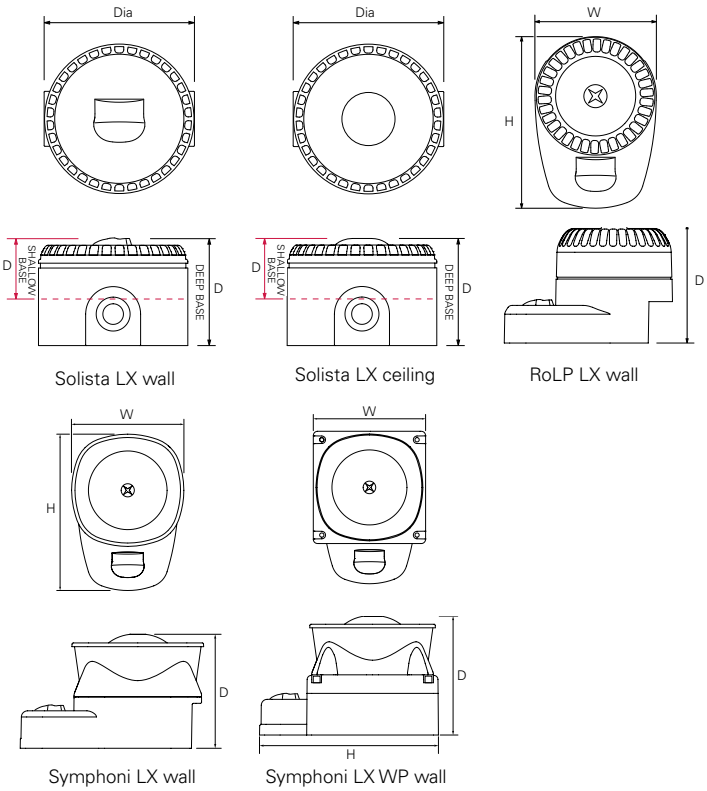

Description	Dia (mm)	D (mm)	W (mm)	H (mm)
Solista LX wall deep base	93	66	-	-
Solista LX wall shallow base	93	38	-	-
Solista LX ceiling shallow base	93	37		
RoLP LX wall	-	95	95	135
Symphoni LX wall	-	92	106	147
Symphoni LX WP wall	-	92	106	147



Catalogue numbers

Description	Code
Solista wall red body shallow base	MFSOLWRS
Solista wall red body deep base	MFSOLWRD
Solista LX ceiling	MFSOLCWS
RoLP wall red body base and sounder	MFROLPWR
RoLP wall red body base only	8500040FULL-0219X
Symphoni LX wall red body	FXSYG1WR
Symphoni LX wall weatherproof red body	FXSYG1WR-WP
Deep base for Solista LX ceiling	FX000WWP

For more guidance on EN-54-23 and placement of VADs, refer to our Fire Installer's Mate pocket guide.



Indicators

In areas which do not have to meet the new regulations regarding EN54-23 visual alarm devices, our range of indicators can still provide reliable light indication.

Low profile LED indicator
MLB124SB



Typical applications:

In regions where the EN54-23 VADs standard is not a requirement, the LED indicator can be used as an indicating device.

Weatherproof LED indicator
MLB124DB



Typical applications:

The weatherproof version of the LED indicator provides an IP65 option ideal for outdoor use.



Dimensions

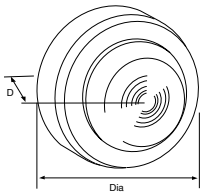

Low profile LED indicator

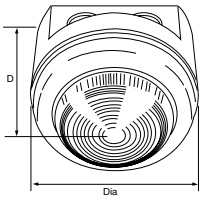

Weatherproof LED indicator

Description	W (mm)	D (mm)
Low profile LED indicator	95	53
Weatherproof LED indicator	95	80

Note: From 31st December 2013 a new beacon standard, EN 54-23 became mandatory across Europe where Construction Product Regulation (CPR) applies. If you are in a region where this standard applies please understand that these indicators do not meet the requirements of the new standards - **see p74 for compliant beacons and sounder beacons**

Features

	MLB124SB	MLB124DB
Ingress protection	IP54	IP65

Catalogue numbers

Description	Code
Low profile LED beacon	MLB124SB
Weatherproof LED beacon	MLB124DB

Sounder indicators

In areas which do not have to meet the new regulations regarding EN54-23 visual alarm devices, our range of sounder indicators can still provide excellent sound quality and light indication.

Xenon sounder indicator
FL-RL-R-S



Typical applications:

In regions where the EN54-23 VADs standard is not a requirement, the xenon sounder indicator provides an alternative option to the xenon indicator - where an audible warning is required in addition to light indication.

Weatherproof Xenon sounder indicator
FL-RL-R-D



Typical applications:

The weatherproof version of the sounder indicator is IP65 rated which allows for installation in harsher environments.

Dimensions

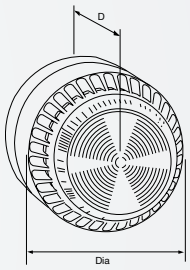

Xenon sounder indicator

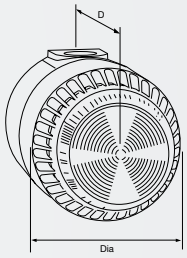

Weatherproof xenon sounder indicator

Description	Dia (mm)	D (mm)
Xenon sounder indicator	93	92
Weatherproof xenon sounder indicator	93	121

Sound output

	XENON sounder indicator, FL-RL-R-S/FL-RL-R-D
Sound output	101dB(a) at 24V dc (typical tone 3)
Tones	32

Note: From 31st December 2013 a new beacon standard, EN 54-23 became mandatory across Europe where Construction Product Regulation (CPR) applies. If you are in a region where this standard applies please understand that these indicators do not meet the requirements of the new standards - **see p74 for compliant beacons and sounder beacons**

Features

	FL-RL-R-S	FL-RL-R-D
Ingress protection	IP54	IP65

Catalogue numbers

Description	Code
Conventional xenon sounder indicator	FL-RL-R-S
Weatherproof IP65 xenon sounder indicator	FL-RL-R-D

Door retainers and relay unit

Door retainers enable doors to be held open under normal conditions but automatically be released in the event of fire alarm activation.

Eaton have a range of door retainers which are robust and simple to install. Both floor and wall mounted retainers, with either mains or 24V dc power supplied variations, are available.

Heavy duty door retainer
MDR240/MDR24L



Typical applications:

Robust and simple to install, the heavy duty door retainer is ideal for a wide range of applications, such as nursing homes, hospitals, schools and industrial premises.

Compact door retainer
FX021240LC/ FX02124VLC



Typical applications:

Equally as reliable, the compact door retainer is also a good choice for nursing homes, hospitals and also busy corridors.

Heavy duty relay unit
MAR724



Typical applications:

Designed for interfacing heavy loads such as door release units or plant shut down equipment with fire alarm systems.

This unit is simple to fix and install and the neat unobtrusive design makes it suitable for use in a wide range of areas.

The heavy duty relay unit is powered by 24V dc external supply and is provided with 2 separate sets of changeover contacts.

Can switch 230V ac mains at 10A

Performance

	MDR240	MDR24L	FX021240LC	FX02124VLC
Holding force	40kg	40kg	45kg	40kg
Power consumption	1.2VA	40mA	1.2VA	40mA
Ingress protection	IP40	IP40	IP42	IP40

Catalogue numbers

Description	Code
Mains powered heavy duty door retainer	MDR240
24V dc heavy duty door retainer	MDR24L
Floor mounting bracket for heavy duty door retainers	ZMDRFBB
Mains powered compact door retainer	FX021240LC
24V dc compact door retainer	FX02124VLC
Floor mounting bracket for compact door retainers	FX021LCFB
Spare striker plate for either magnet	ZMDRSWIV
Heavy duty relay unit	MAR724

Power supply

Specifically recommended as an auxiliary power supply unit for fire detection system components such as electromagnets, notification devices, etc.

Using the unit in large systems eliminates the problem of long power cable runs which simplifies installation.

EN54 pt.4 approved power supply unit
SPS Range



Typical applications:

The new range of EN 54-4 certified safety power supplies offer a compact, robust and versatile power solution to installers, allowing them to safely power fire detection and signaling systems in small to large installations.

Compact and discrete design allows for these SPS to be installed in a visible location such as a hotel lobby for instance. Comprehensive yet simple status indicators on the front of the unit help installers, commissioners and maintainers assess status of the unit.

Features

	SPSS-2423/2433/2453
Ingress protection	IP30

Catalogue numbers

Description	Code
Safety power supply 24V / 1.5A (batteries not supplied)	SPS-2423
Safety power supply 24V / 2.5A (batteries not supplied)	SPS-2433
Safety power supply 24V / 4.5A (batteries not supplied)	SPS-2453



Door retainers enable doors to be held open under normal conditions but automatically be released in the event of fire alarm activation.

CE



Notes

Notes

Notes



Spring Mews
London, UK

Contact details

Sales and technical support



Contact

Eaton

Eaton Electrical Systems Ltd
Wheatley Hall Road
Doncaster
South Yorkshire
DN2 4NB
United Kingdom
www.eaton.com

Sales

T: +44 (0)1633 628 566
F: +44 (0)1302 367 155
E: FireCustomerService@eaton.com

Technical

T: +44 (0)1302 303 350
F: +44 (0)1302 303 332
E: FireTechSupport@eaton.com

Service

T: +44 (0)1302 303 352
F: +44 (0)1302 303 332
E: FireService@eaton.com

Export

T: +44 (0)1302 303 344
F: +44 (0)1302 303 345
E: FireExport@eaton.com

Online Resources

Visit www.eaton.com for the following resources:

- 24/7 online product support
- Catalogue and literature
- Product profiles
- Datasheets, installation and user manuals

At Eaton, we're energized by the challenge of powering a world that demands more. With over 100 years experience in electrical power management, we have the expertise to see beyond today. From groundbreaking products to turnkey design and engineering services, critical industries around the globe count on Eaton.

We power businesses with reliable, efficient and safe electrical power management solutions. Combined with our personal service, support and bold thinking, we are answering tomorrow's needs today.

Follow the charge with Eaton, visit eaton.eu

UAE
Middle East Headquarters
National Industries Park
Jebel Ali (South)
P.O. Box 261768
Dubai, United Arab Emirates
Tel: +971 4 806 6100

Kuwait
Shayma Tower, Mezzanine Floor
Omar Bin al Khattab Street Sharq
Kuwait
Tel: +965 22253606
Fax:+965 22253608

Saudi Arabia
King Abdullah Street (Ex. Dhahran St.)
Dhahran Centre, 1st Floor Office 101
P.O Box 620
Al-Khobar 31952, Saudi Arabia
Tel: +966 1 38825424 / 8825680
Fax:+966 1 38825732

Saudi Arabia
Saad Al-Ajlan Trade Centre 1st Floor
Office 9, Olaya Main Stret
P.O Box 19651
Riyadh 11445, Saudi Arabia
Tel: +966 1 4602275 / 288-6238
Fax:+966 1 14602291

Lebanon
Sin El Fil, Saydet Al Wardiyeh Street
Beirut Symposium Building
2nd Floor, Office 2A
Tel/Fax: +961 1 494711

Qatar
Greedco 1 Building, Office no 4303
PO Box 91357, C Ring Road
Doha, Qatar
Tel: +974 4467273
Fax: +974 44667134

Jordan
Amman-Mekkia & Madina Streets Intersection
Al-Haramien intersection.
Al Hajar Al Aswad Cplx, 3rd floor - Office 306
Tel: +962 6 5542538

Oman
Maktabi building, Office No 208
Near Zakher Mall, Al Khuwair
PO Box 1982, PC 111 CPO
Oman
Tel: +968 24391973
Fax:+968 24483801

Egypt
Building No. 289 Off 90th Street
Apartment 4B, 4th Street
5th District, New Cario, Egypt
Tel: +2 02 230 650 46
+2 02 230 650 47

Eaton
Electrical Sector EMEA
Route de la Longeraie 7
1110 Morges, Switzerland
Web: www.eaton.com

© 2020 Eaton
All Rights Reserved

Pub Reference: CF-CC2556
March 2020

Powering Business Worldwide