simex

Assisting the automation industry since 1986

User manual
METER
SUR-94

- Firmware: v.1.01 or higher
- Input type: universal
- 4 x 20 mm display



CE

Read the user's manual carefully before starting to use the unit or software.
Producer reserves the right to implement changes without prior notice.

CONTENTS

1. BASIC REQUIREMENTS AND USER SAFETY....3
2. GENERAL CHARACTERISTICS....4
3. TECHNICAL DATA....4
4. DEVICE INSTALLATION....7
4.1. UNPACKING....7
4.2. ASSEMBLY....8
4.3. CONNECTION METHOD....10
4.4. MAINTENANCE....18
5. FRONT PANEL DESCRIPTION....18
6. PRINCIPLE OF OPERATION....19
6.1. MEASUREMENT MODE....19
6.2. DETECTION OF THE PEAK VALUES....21
6.3. CONTROL OF THE RELAY OUTPUTS....21
6.3.1. One threshold mode....23
6.3.2. Two thresholds mode....24
7. DEVICE PROGRAMMING....25
7.1. PROGRAMMING MENU....25
7.2. PARAMETERS EDITION....26
7.2.1. Numeric parameters (digit change mode)....26
7.2.2. Numeric parameters (slide change mode)....26
7.2.3. Switch parameters (“LIST” type)....27
7.3. MENU DESCRIPTION....27
7.3.1. “rEL1” menu....28
7.3.2. “bEEP” menu....30
7.3.3. “inPt” menu (common parameters)....30
7.3.4. “inPt” menu (parameters of temperature inputs)....31
7.3.5. “inPt” menu (parameters of current and voltage inputs)....31
7.3.6. ”OutP” menu....33
7.3.7. ”bri” parameter....35
7.3.8. ”HOLd” menu....35
7.3.9. ”SECu” menu....36
7.3.10. ”rS” menu....36
7.3.11. ”Edit” parameter....37
7.3.12. ”dEFS” parameter....37
7.3.13. ”SErv” menu....37
7.4. MENU STRUCTURE....38
8. THE ALARM LED....40
9. OVER-CURRENT PROTECTION....40
10. DISPLAYED VALUES CALCULATION....40
10.1. ADDITIONAL CALCULATIONS (USED CONVERSION CHARACTERISTIC)....40
10.1.1. Linear characteristic....41
10.1.2. Square characteristic....41
10.1.3. Square root characteristic....42
10.1.4. User defined characteristic....42
10.2. EXAMPLES OF CALCULATIONS....43
11. THE MODBUS PROTOCOL HANDLING....46
11.1. LIST OF REGISTERS....46
11.2. TRANSMISSION ERRORS DESCRIPTION....51
11.3. EXAMPLES OF QUERY/ANSWER FRAMES....51
12. DEFAULT AND USER'S SETTINGS LIST....54

Explanation of symbols used in the manual:



- This symbol denotes especially important guidelines concerning the installation and operation of the device. Not complying with the guidelines denoted by this symbol may cause an accident, damage or equipment destruction.

IF THE DEVICE IS NOT USED ACCORDING TO THE MANUAL THE USER IS RESPONSIBLE FOR POSSIBLE DAMAGES.



- This symbol denotes especially important characteristics of the unit. Read any information regarding this symbol carefully

1. BASIC REQUIREMENTS AND USER SAFETY



- **The manufacturer is not responsible for any damages caused by inappropriate installation, not maintaining the proper environmental conditions and using the unit contrary to its assignment.**
- Installation should be conducted by qualified personnel . During installation all available safety requirements should be considered. The fitter is responsible for executing the installation according to this manual, local safety and EMC regulations.
- If the device is equipped with PE connector, it should be connected to PE wire. Otherwise PE wire should be connected to GND connector.
- The unit must be properly set-up, according to the application. Incorrect configuration can cause defective operation, which can lead to unit damage or an accident.
- **If in the case of a unit malfunction there is a risk of a serious threat to the safety of people or property additional, independent systems and solutions to prevent such a threat must be used.**
- **The unit uses dangerous voltage that can cause a lethal accident. The unit must be switched off and disconnected from the power supply prior to starting installation of troubleshooting (in the case of malfunction).**
- Neighbouring and connected equipment must meet the appropriate standards and regulations concerning safety and be equipped with adequate overvoltage and interference filters.
- **Do not attempt to disassemble, repair or modify the unit yourself. The unit has no user serviceable parts. Defective units must be disconnected and submitted for repairs at an authorized service centre.**



- In order to minimize fire or electric shock hazard, the unit must be protected against atmospheric precipitation and excessive humidity.

- Do not use the unit in areas threatened with excessive shocks, vibrations, dust, humidity, corrosive gasses and oils.
- Do not use the unit in areas where there is risk of explosions.
- Do not use the unit in areas with significant temperature variations, exposure to condensation or ice.
- Do not use the unit in areas exposed to direct sunlight.
- Make sure that the ambient temperature (e.g. inside the control box) does not exceed the recommended values. In such cases forced cooling of the unit must be considered (e.g. by using a ventilator).

The unit is designed for operation in an industrial environment and must not be used in a household environment or similar.

2. GENERAL CHARACTERISTICS

The **SUR-94** meter is equipped with one current input (0-20mA), two voltage inputs (0-10V and 0-150 mV), one RTD input (Pt 100/500/1000) and one TC input (thermocouple: K, S, J, T, N, R, B, E). Temperature of cold ends is compensated automatically. RTD and TC inputs are fully linearised. It is allowed to use only one input at the same time. Input ranges are described in the next chapter. Result is showed on 4-digit LED display.

The device can be equipped with two or four relay (or OC type) outputs. Optionally **SUR-94** with two relays (or OC type) outputs can be equipped with active current output, passive isolated current output or active voltage output. Device **SUR-94** is equipped with RS-485 / Modbus RTU communication interface and sensor supply output. The meter can be ordered in two power supply versions.

SUR-94 can be used for controlling and regulation of processes need proportional and threshold control like: temperature processes (heating or cooling), valves controlling or other.

3. TECHNICAL DATA

Power supply voltage (depending on version) External fuse (required) Power consumption	85...**230**...260V AC/DC; 50 ÷ 60 Hz (separated) or 19...**24**...50V DC and 16...**24**...35V AC (separated) T - type, max. 2 A max. 6.5 VA @ 85 ÷ 260V AC/DC max. 6.5 VA @ 16V ÷ 35V AC max. 6.5 W @ 19V ÷ 50V DC

Current input (20 mA)	0÷20 mA, 4÷20 mA overload protected, input current is limited to 50 mA (typically)
Current measurement accuracy	± 0.1% @ 25°C; ± one digit (for 0÷20 mA range)
Current input resistance	< 65 Ω (typical 30 Ω)
Accepted prolonged input overload	20%

Voltage input (10V range)	0÷5 V, 1÷5 V, 0÷10 V, 2÷10 V
Voltage measurement accuracy	± 0.1% @ 25°C; ± one digit (for 0÷10 V range)
Voltage input resistance	> 100 kW (while maintaining correct polarization)
Accepted prolonged input overload	20%

Voltage input (150mV range)	0÷60 mV, 0÷75 mV, 0÷100 mV, 0÷150 mV
Voltage measurement accuracy	± 0.1% @ 25°C; ± one digit (for 0÷150 mV range)
Voltage input resistance	> 1,5 MΩ
Accepted prolonged input overload	20%

RTD input (resistive)	Pt 100, Pt 500,Pt 1000
Measurement range	-100°C ÷ +600°C
Measurement accuracy	± 0,1% @ 25°C; ± one digit
Measurement wires resistance	max. 20 Ω (every wire)

Thermocouple input	K, S, J, T, N, R, B, E
Thermocouple input range	K: -200˚C ÷ +1370˚C S: -50˚C ÷ +1768˚C J: -210˚C ÷ +1200˚C T: -200˚C ÷ + 400˚C N: -200˚C ÷ +1300˚C R: -50˚C ÷ +1768˚C B: +250˚C ÷ +1820˚C E: -200˚C ÷ +1000˚C
Measurement accuracy	K, J, E: ± 0.1% @ 25°C; ± one digit N: ± 0.2% @ 25°C; ± one digit S, T, R, B: ± 0.5% @ 25°C; ± one digit
Accuracy of cold ends temperature compensation	± 1˚C

Sensor power supply output	24V +5%, -10% / max. 100 mA, stabilized

Relay output	0, 2 or 4 NO, 1A/250V AC (cos φ = 1)

OC-type output	0, 2 or 4; 30mA / 30VDC / 100mW

Active current output (optional, for two relays or two OC-type output version only)	range max. 0 ÷ 24 mA
Load resistance max.	700 Ω
Passive isolated current output (optional, for two relays or two OC-type output version only)	range max. 2.8 ÷ 24 mA
Supply voltage	Us = 9.5 ÷ 36V
Load resistance max.	(Us – 9.5V) / 24mA [kΩ]
Active voltage output (optional, for two relays or two OC-type output version only)	range max. 0 ÷ 11V
Load resistance min.	2000 Ω
Temperature stability	50 ppm / °C
Display range	-999 ÷ 9999, plus decimal point
Communication interface	RS-485, 8N1 and 8N2, Modbus RTU, not separated
Baud rate	1200 bit/s ÷ 115200 bit/s
Display (depending on version)	LED, 4 digit, 20mm height, red or LED, 4 digit, 20mm height, green
Data memory	non-volatile memory, EEPROM type
Front panel protection	IP 65 optional version with panel cut-out sealing available
Terminals protection	IP 20
Housing type Housing material Housing dimensions Mounting hole Assembly depth Panel thickness	panel NORYL - GFN2S E1 96 x 48 x 100 mm 90.5 x 43 mm 102 mm max. 5 mm
Operating temperature (depending on version)	0°C to +50°C or -20°C to +50°C
Storage temperature (depending on version)	-10°C to +70°C or -20°C to +70°C

Humidity	5 to 90% no condensation
Altitude	up to 2000 meters above sea level
Screws tightening max. torque	0,5 Nm
Max. connection leads cross section	2,5 mm^2
Safety requirements	according to: PN-EN 61010-1 installation category: II pollution degree: 2 voltage in relation to ground: 300V AC insulation resistance: >20MΩ insulation strength between power supply and input/output terminal: 1min. @ 2300V insulation strength between relays terminal: 1min. @ 1350V
EMC	according to: PN-EN 61326-1



This is a class A unit. In a residential or a similar area it can cause radio frequency interference. In such cases the user can be requested to use appropriate preventive measures.

4. DEVICE INSTALLATION

The unit has been designed and manufactured in a way assuring a high level of user safety and resistance to interference occurring in a typical industrial environment. In order to take full advantage of these characteristics installation of the unit must be conducted correctly and according to the local regulations.



- Read the basic safety requirements on page **3** prior to starting the installation.
- Ensure that the power supply network voltage corresponds to the nominal voltage stated on the unit's identification label.
- The load must correspond to the requirements listed in the technical data.
- All installation works must be conducted with a disconnected power supply.
- Protecting the power supply connections against unauthorized persons must be taken into consideration.

4.1. UNPACKING

After removing the unit from the protective packaging, check for transportation damage. Any transportation damage must be immediately reported to the carrier. Also, write down the unit serial number located on the housing and report the damage to the manufacturer.

Attached with the unit please find:
- user's manual,
- warranty,
- assembly brackets - 2 pieces.

4.2. ASSEMBLY

- The unit is designed for mounting inside housings (control panel, switchboard) insuring appropriate protection against surges and interference. Metal housings must be connected to ground in a way that complies with the governing regulations.
- Disconnect the power supply prior to starting assembly.
- Check the connections are wired correctly prior to switching the unit on.

In order to install the unit, a 90.5 x 43 mm mounting hole (**Figure 4.1**, **4.2**) must be prepared. The thickness of the material of which the panel is made must not exceed 5mm. When preparing the mounting hole take the grooves for catches located on both sides of the housing into consideration (**Figure 4.1**, **4.2**). Place the unit in the mounting hole inserting it from the front side of the panel, and then fix it using the brackets (**Figure 4.3**). The minimum distances between the centre points of multiple units - due to the thermal and mechanical conditions of operation - are 115 mm x 67mm (**Figure 4.4**).

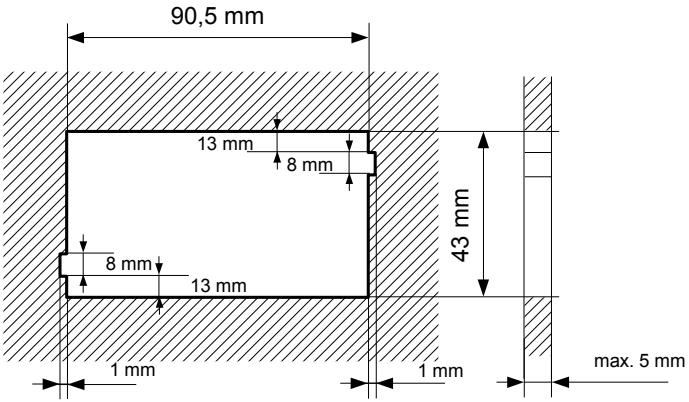

Figure 4.1. Recommended mounting hole dimensions

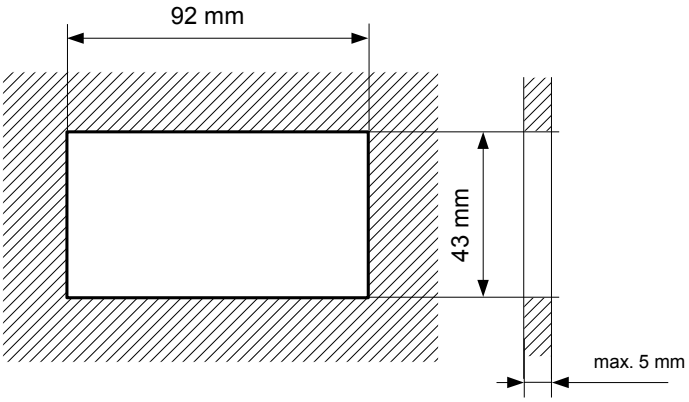

Figure 4.2. Allowable mounting hole dimensions

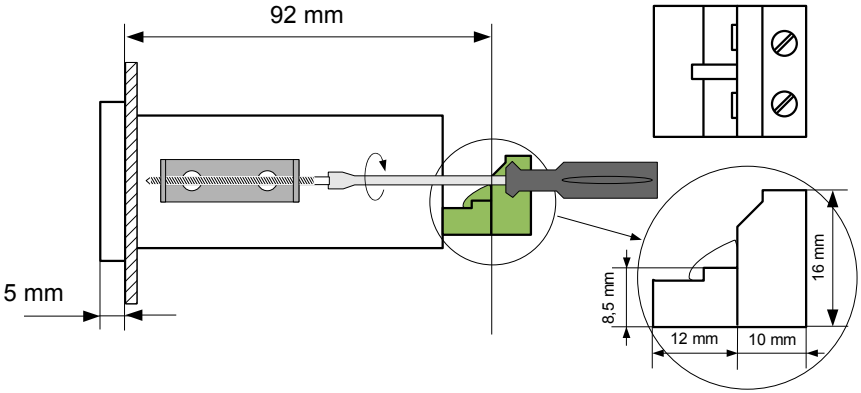

Figure 4.3. Installing of brackets, and dimensions of connectors.

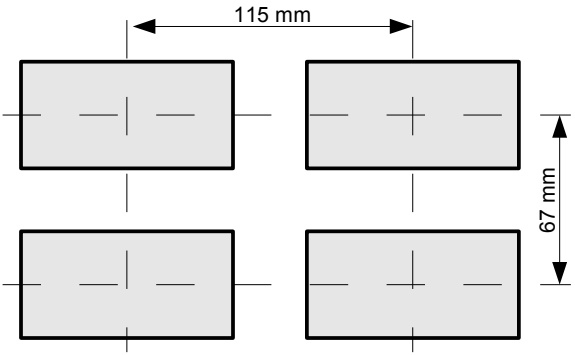

Figure 4.4. Minimum distances when assembly of a number of units

4.3. CONNECTION METHOD

Caution



- Installation should be conducted by qualified personnel . During installation all available safety requirements should be considered. The fitter is responsible for executing the installation according to this manual, local safety and EMC regulations.

- The unit is not equipped with an internal fuse or power supply circuit breaker. Because of this an external time-delay cut-out fuse with a small nominal current value must be used (recommended bipolar, max. 2A) and a power supply circuit-breaker located near the unit. In the case of using a monopolar fuse it must be mounted on the phase cable (L).

- The power supply network cable diameter must be selected in such a way that in the case of a short circuit of the cable from the side of the unit the cable shall be protected against destruction with an electrical installation fuse.

- Wiring must meet appropriate standards and local regulations and laws.

- In order to secure against accidental short circuit the connection cables must be terminated with appropriate insulated cable tips.

- Tighten the clamping screws. The recommended tightening torque is 0.5 Nm. Loose screws can cause fire or defective operation. Over tightening can lead to damaging the connections inside the units and breaking the thread.

- In the case of the unit being fitted with separable clamps they should be inserted into appropriate connectors in the unit, even if they are not used for any connections.

- Unused terminals (marked as n.c.) must not be used for connecting any connecting cables (e.g. as bridges), because this can cause damage to the equipment or electric shock.

- If the unit is equipped with housing, covers and sealing to, protecting against water intrusion, pay special attention to their correct tightening or clamping. In the case of any doubt consider using additional preventive measures (covers, roofing, seals, etc.). Carelessly executed assembly can increase the risk of electric shock.

- After the installation is completed do not touch the unit's connections when it is switched on, because it carries the risk of electrical shock.

Due to possible significant interference in industrial installations appropriate measures assuring correct operation of the unit must be applied. To avoid the unit of improper indications keep recommendations listed below.

– Avoid running signal cables and transmission cables together with power supply cables and cables controlling inductive loads (e.g. contactors). Such cables should cross at a right angle.

– Contactor coils and inductive loads should be equipped with interference protection systems, e.g. RC-type.

– Use of screened signal cables is recommended. Signal cable screens should be connected to the earthing only at one of the ends of the screened cable.

– In the case of magnetically induced interference the use of twisted pair of signal cables is recommended. Twisted pair (best if shielded) must be used with RS-485 serial transmission connections.

– In the case of measurement or control signals are longer than 30m or go outside of the building then additional safety circuits are required.

– In the case of interference from the power supply side the use of appropriate interference filters is recommended. Bear in mind that the connection between the filter and the unit should be as short as possible and the metal housing of the filter must be connected to the earth with the largest possible surface. The cables connected to the filter output must not be run with cables with interference (e.g. circuits controlling relays or contactors).

Connections of power supply voltage and measurement signals are executed using the screw connections on the back of the unit's housing.

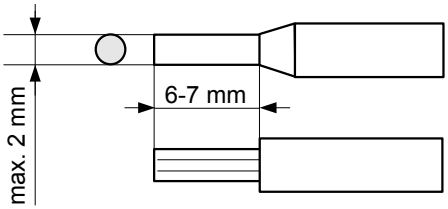

Figure 4.5. Method of cable insulation replacing and cable terminals

All connections must be made while power supply is disconnected !

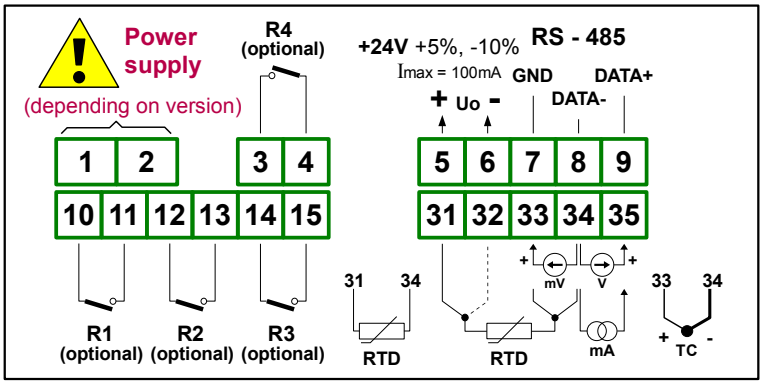

Figure 4.6. Terminals description (relay outputs)

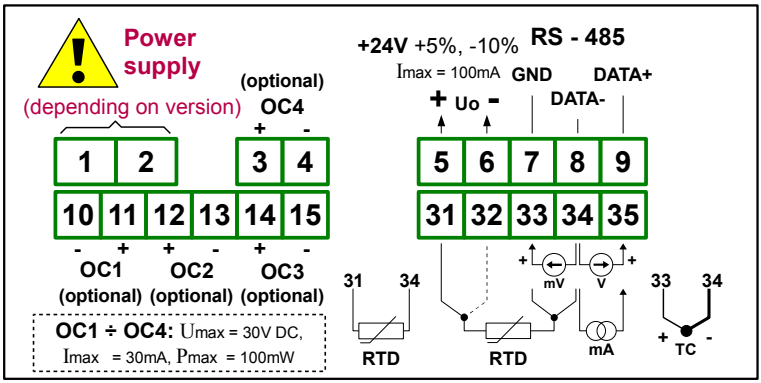

Figure 4.7. Terminals description (OC-type outputs)

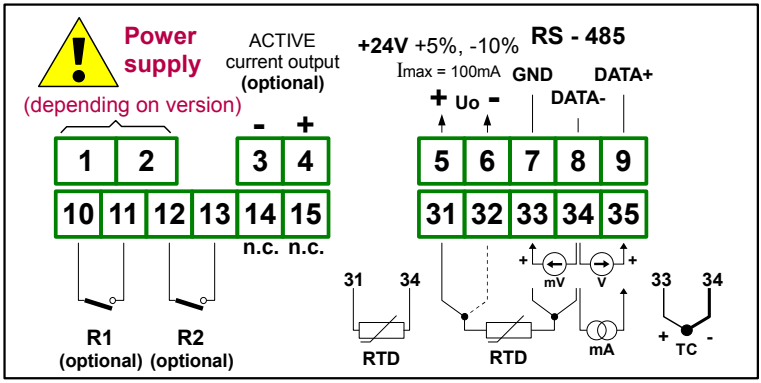

Figure 4.8. Terminals description (relay and active current outputs)

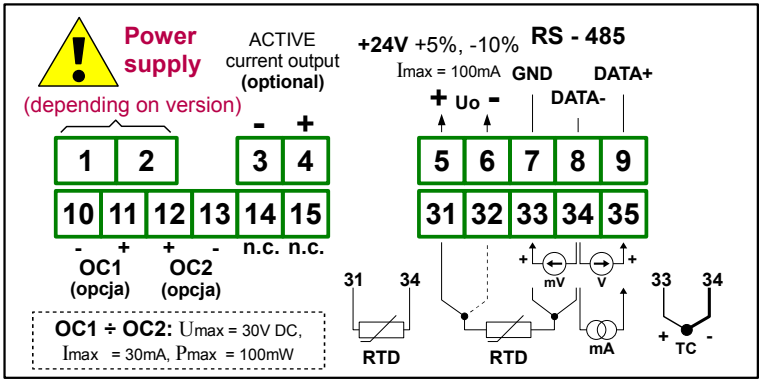

Figure 4.9. Terminals description (OC-type and active current outputs)

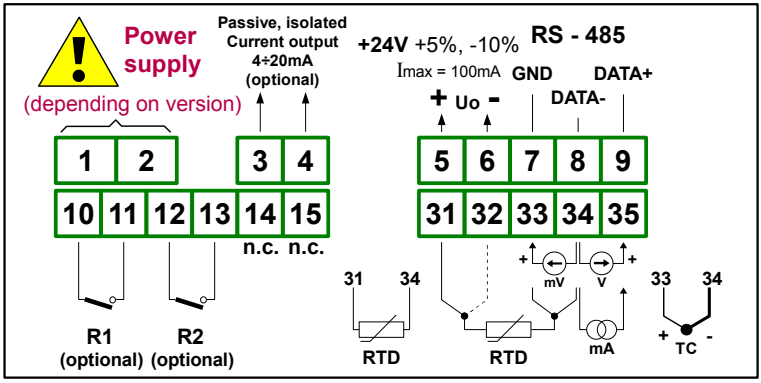

Figure 4.10. Terminals description (relay and passive current outputs)

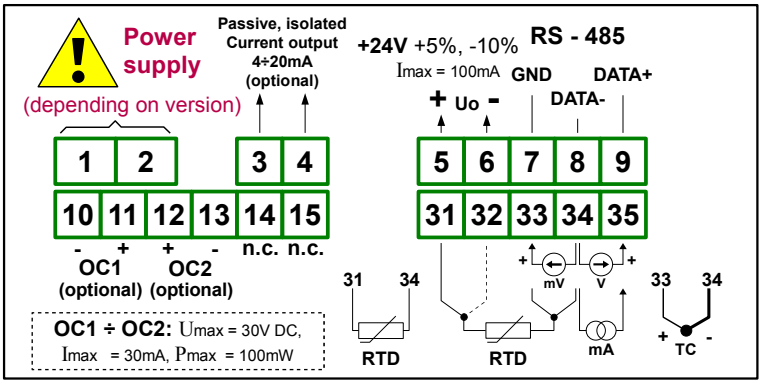

Figure 4.11. Terminals description (OC-type and passive current outputs)

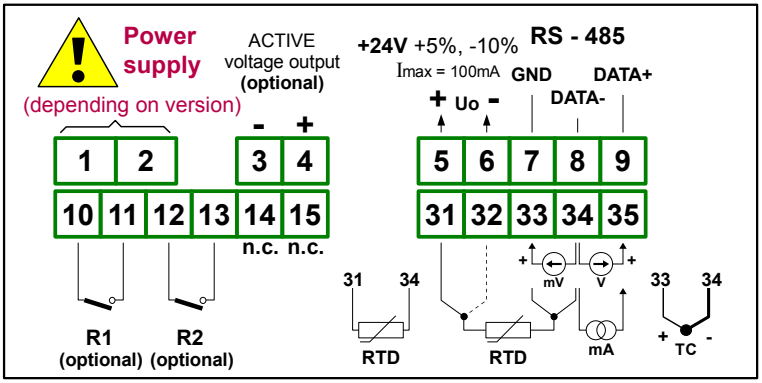

Figure 4.12. Terminals description (relay and active voltage outputs)

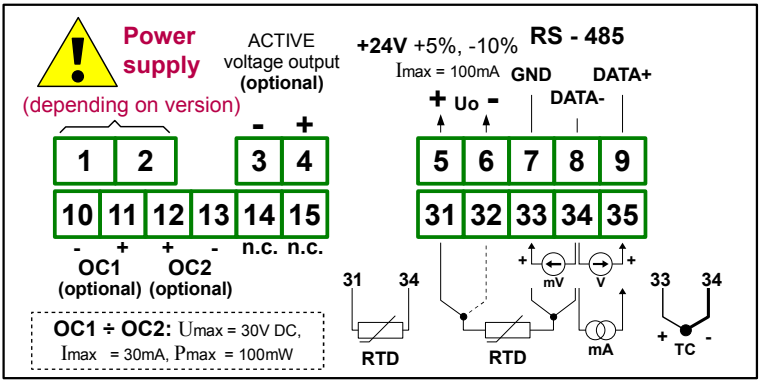

Figure 4.13. Terminals description (OC-type and active voltage outputs)

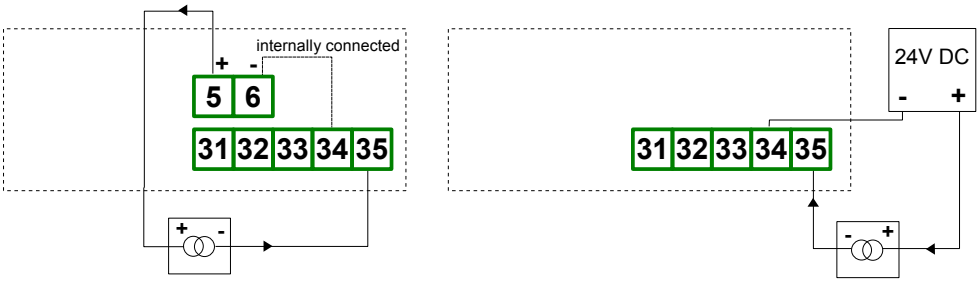

Figure 4.14. Connection of 2-wire current converters

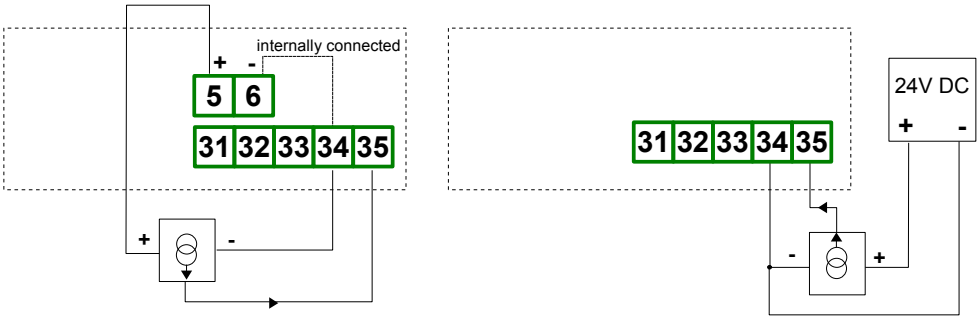

Figure 4.15. Connection of 3-wire current converters

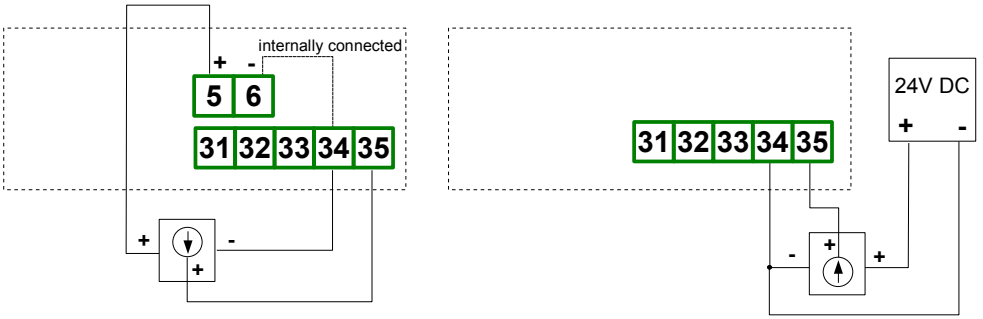

Figure 4.16. Connection of voltage converters

Temperature sensor can be connected to the device in typical 4-wire circuit (**Figure 4.17a**) or 3-wire circuit (**Figure 4.17b**). Due to precision of measurement 4-wire circuit is recommended.

If 2 wire circuit is used, the resistance of wires should be as small as possible, to avoid of measurement errors. Measured value can be corrected (constant correction) using „**toFS**" parameter from menu „**inPt**". Due to low precision 2-wire connection is not recommended.

When 4-wires or 2-wires connection is used, the resistance of particular wires (Ra ÷ Rd) **CAN BE DIFFERENT**. When 3-wires connection is used, the resistance of particular wires (Ra ÷ Rd) **MUST BE IDENTICAL** to enable proper compensation of it's resistance. The resistance of particular wire **should not be greater than 20 Ω.**

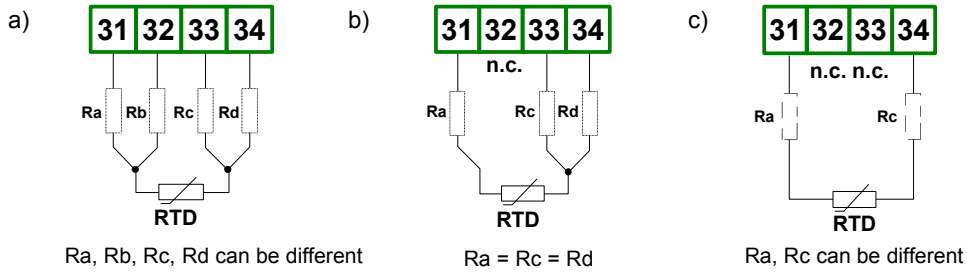

Figure 4.17. Connection of RTD sensors:
a) 4-wires circuit; b) 3-wires circuit; c) 2-wires circuit

The connection circuit should not be changed while unit is powered. While using TC, RTD or voltage inputs (0-150mV) the device is able to detect wire breaks. Wire breaks are detected within about 2 seconds. For connectors number 32 and 33 of RTD input it may take up to about 7 seconds. During detection measurements will be incorrect. If wire break is detected **"S.Err"** (sensor error) message is displayed.

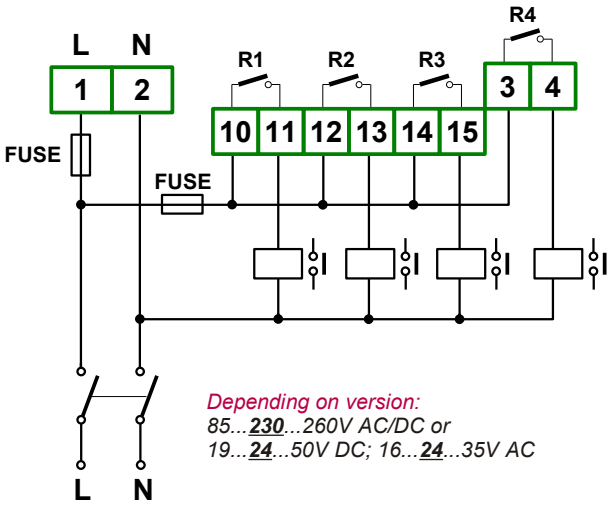

Figure 4.18. Connection of power supply and relays

Contacts of relay outputs are not equipped with spark suppressors. While use the relay outputs for switching of inductive loads (coils, contactors, power relays, electromagnets, motors etc.) it is required to use additional suppression circuit (typically capacitor 47nF/ min. 250VAC in series with 100R/5W resistor), connected in parallel to relay terminals or (better) directly on the load. In consequence of using the suppression circuit, the level of generated electromagnetic disturbances is lower, and the life of relay contacts rises.

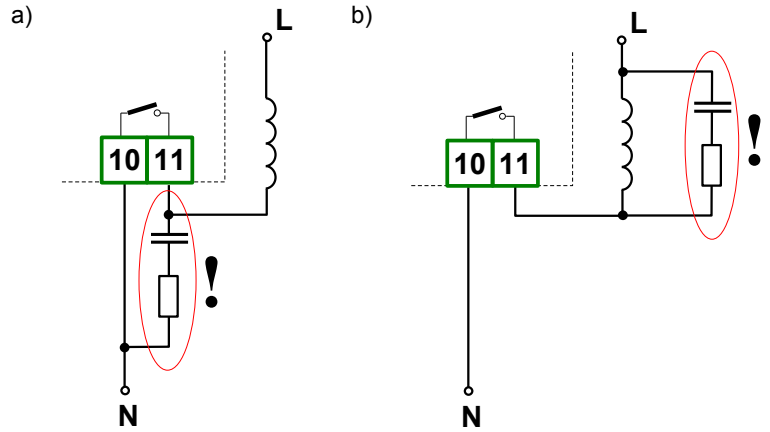

Figure 4.19. Examples of suppression circuit connection:
a) to relay terminals; b) to the inductive load

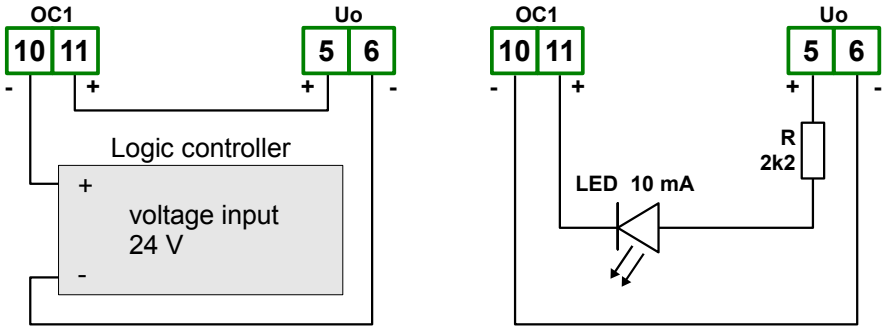

Figure 4.20. Example of OC-type outputs connection

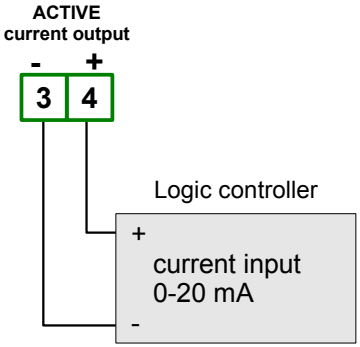

Figure 4.21. Example of active current outputs connection (for device with active current output only)

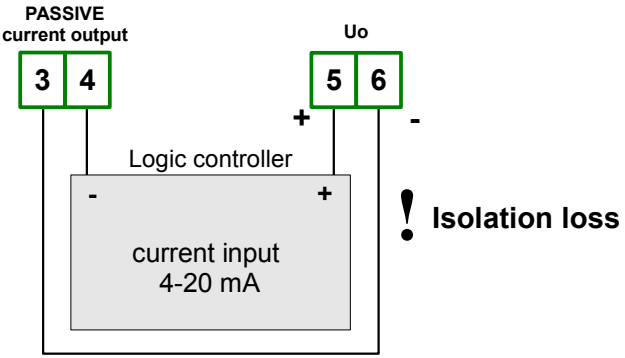

Figure 4.22. Example of passive current outputs connection (for device with passive current output only)

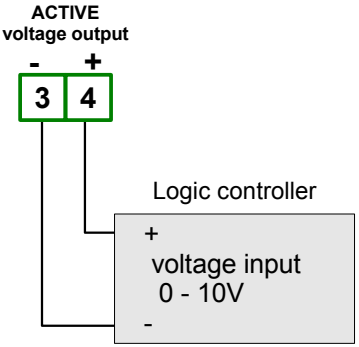

Figure 4.23. Example of active voltage outputs connection (for device with active voltage output only)

4.4. MAINTENANCE

The unit does not have any internal replaceable or adjustable components available to the user. Pay attention to the ambient temperature in the room where the unit is operating. Excessively high temperatures cause faster ageing of the internal components and shorten the fault-free time of the unit's operation.
In cases where the unit gets dirty do not clean with solvents. For cleaning use warm water with small amount of detergent or in the case of more significant contamination ethyl or isopropyl alcohol.



Using any other agents can cause permanent damage to the housing.



Product marked with this symbol should not be placed in municipal waste. Please check local regulations for disposal of electronic products.

5. FRONT PANEL DESCRIPTION



Symbols and functions of push-buttons:



Symbol used in the manual: **[ESC/MENU]**
Functions:
- Enter to main menu (press and hold by at least 2 sec.)
- Exit the current level and Enter to previous menu (or measure mode)
- Cancel the changes made in parameter being edited



Symbol used in the manual: **[ENTER]**
Functions**:**
- Start to edit the parameter
- Enter to the sub-menu,
- Confirmation of changes made in parameter being edited



Symbol used in the manual: **[^] [v]**
Functions**:**
- Change of the present menu,
- Modification of the parameter value,
- Change of the display mode.

6. PRINCIPLE OF OPERATION

After turning the power supply on, device ID and software version are showed on the display, next the controller goes to the measurement mode.

6.1. MEASUREMENT MODE

In the measure mode, the measurement results, converted over selected characteristic, are displayed on the LED display. The measurement range equal to the nominal range is called: ***nominal measurement range,*** and the measurement range equal to the extended nominal range is called: ***permissible measurement range*** (Figure 6.1, 6.2).

For temperature inputs (TC and RTD) there is linear characteristic available only. For this kind of inputs ***nominal measurement range,*** and ***permissible measurement range*** are the same (no range extension available, Figure 6.3).

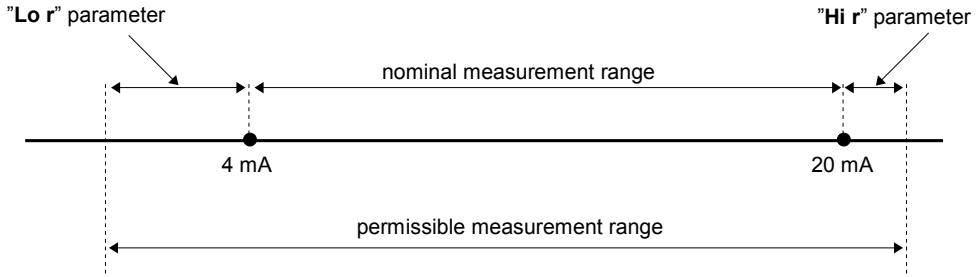

Figure 6.1. Definitions of measurement ranges in mode 4 ÷ 20mA

If the result of measurement exceeds the ***permissible measurement range***, warning **"-Hi-"** or **"-Lo-"** is displayed rather than input signal, depending on exceeded value (see

description of **"Lo r"** and **"Hi r"** parameters, paragraph ***"inPt" menu***). The warning can be effect of measurement circuit malfunction. In that case **"-Lo-"** means shortcut and **"-Hi-"** means break of measurement circuit. If sensor failure will be detected (e.g. broken wires), then **"S.Err"** warning will be displayed.

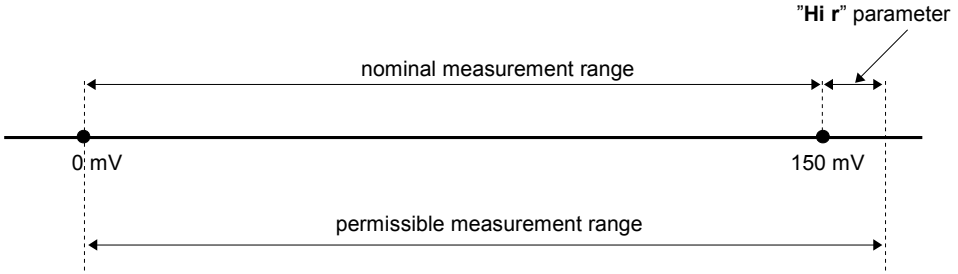

Figure 6.2. Definitions of measurement ranges in mode 0 ÷ 150mV

If the measurement value do not exceeds ***permissible measurement range*** but displayed value exceeds range -999 ÷ 9999, the warning "**-Ov-**" is displayed rather than the calculated result.

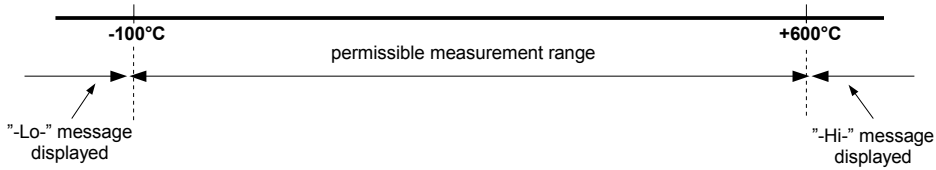

Figure 6.3. Definitions of measurement ranges in mode Pt100

In the measurement mode user can check main thresholds values. After pressing **[^]** or **[v]** button, name of the threshold (e.g. **"rEL1"**) and his value will be displayed on the display in alternating mode. If **[^]** or **[v]** will be pressed in 5 sec again, the next threshold will be displayed, else the device comes back to the measurement mode. If a ***free access*** is enabled (see description of ***"SECu" menu***), user can change the value of particular threshold pressing button **[ENTER]** (see: ***PARAMETERS EDITION***).

All accessible parameters can be changed by entering the menu (see: ***DEVICE PROGRAMMING***). Use the local keyboard or the remote controller to do it. (Note: all parameters can be remote changed via RS-485 interface).

Configuration of the device (via menu or RS-485 interface) **does not stop measures**.

6.2. DETECTION OF THE PEAK VALUES

The **SUR-94** controller is equipped with peaks detection function. It can detect a peaks of the input signal and display their values. Presets connected with this function are placed in **"HOLd"** menu (see description of ***"HOLd" menu***). The detection of the peak can be done if the measured signal raises and drops of value at least equal to parameter **"PEA"**. Detected peaks are displayed during the time defined by parameter **"timE"**. If a new peak will be detected while one is displayed, this new peak will be displayed and display time counter will be cleared (Figure 6.4). If no peaks are detected while time **"timE"** elapses**,** device starts to show the current value of input signal again. If „**HdiS**"="**HOLD**" then setting parameter **"timE"=0.0** causes holding peak value until **[ESC]** button is pressed. If „**HdiS**"="**rEAL**" then value **"timE"=0.0** means no holding. Displaying peak value is signalized by flashing most right decimal point.

The relays/LEDs and analogue outputs can be controlled depend on the current value of input signal or the peak value (see ***"HOLd" menu***).

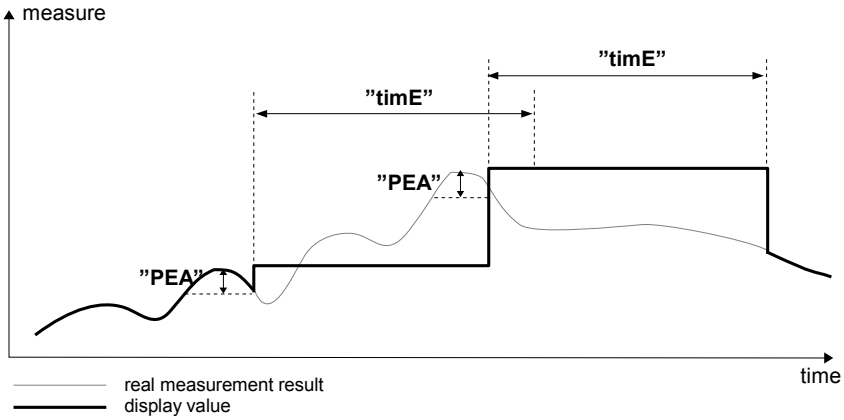

Figure 6.4. Process of peaks detection

6.3. CONTROL OF THE RELAY OUTPUTS

The control of the object (measured signal) is realized via relay outputs. Front panel LEDs named „**R**" indicates the state of particular relay output.

If device is not equipped with one or more relay outputs, menus refer to this relays are available, but apply to LED indicators only. In such case LEDs indicates exceeding of particular thresholds.

Modes of the control can be changed depend on the values of parameters **"SEtP"**, **"SEt2", "HYSt"**, **"modE"**, **"t on"**, **"toFF"**, **"unit"** and **"AL".** Depend on **"modE"** parameter, relays can be not used or controlled over one or two thresholds values.

If one threshold is used (Figure 6.5) the relay can be turned on (**"modE"** = **"on"**) or off (**"modE"** = **"oFF"**) when the input signal value is contained in ***zone A.*** If two thresholds are used (Figure 6.6) the relay will be turned on when value of input signal is contained in ***zone A*** (**"modE"** = **"in"**) or ***zone B*** (**"modE"** = **"out"**) and turned off if the signal is contained in the second one.

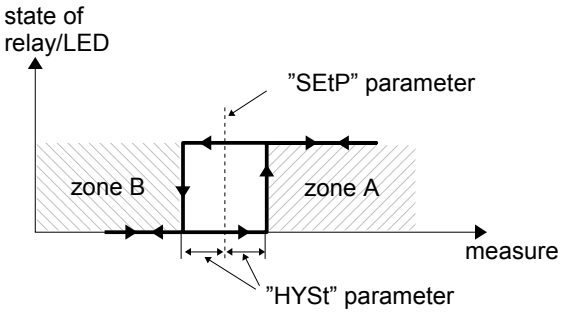

Figure 6.5. One threshold control of the relay/LED outputs

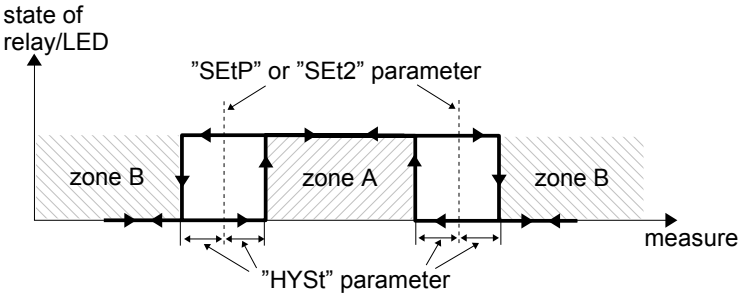

Figure 6.6. Two threshold control of the relay/LED outputs

The relay outputs and LEDs (named **R**) can be controlled depend on both - the current value and the peak value (when peak detection is active) of the input signal.

6.3.1. One threshold mode

Figure 6.7 presents the principle of relay outputs operation for one threshold mode, and an example values of other parameters.

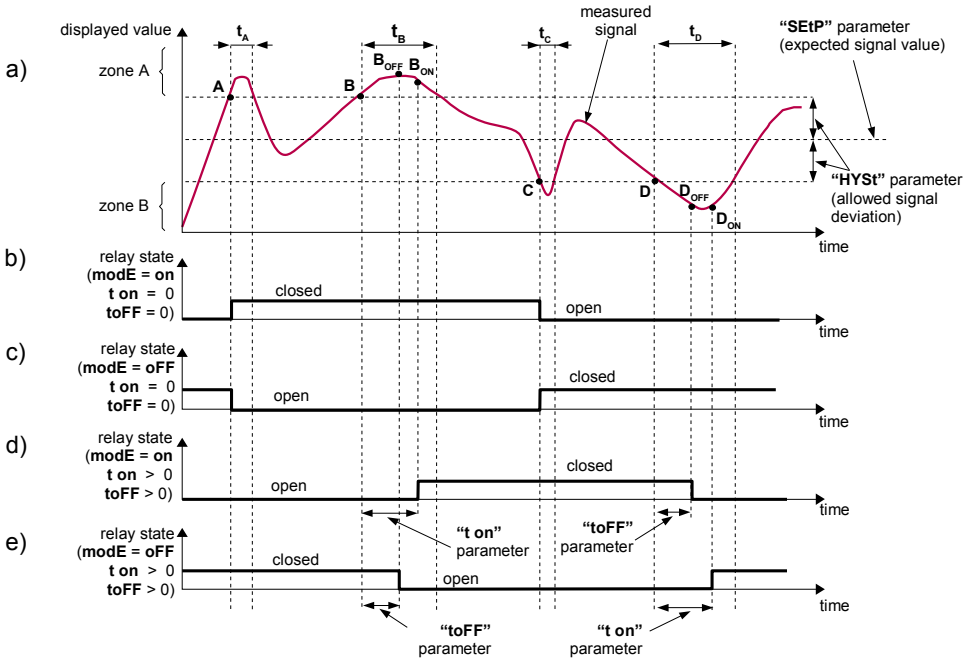

Description:

A, B, C, D - points where measured signal exceeds border values (expected value ± allowed deviation)

B_{ON} ,B_{OFF} ,D_{ON} ,D_{OFF} - relays state changes moments: (for **"t on"** > 0, **"toFF"** > 0)

t_A , t_B , t_C , t_D - time periods while input signal is in zone A or zone B

Figure 6.7. Principle of LED/relay output operation for one threshold mode

Parameter **"SEtP"** sets a **threshold** of the relay, and parameter **"HYSt"** sets a **hysteresis** of the relay (Figure 6.7 a). The relay can change his state **only** when input value exceeds (over or under) ***border value*** and t_A ,t_B ,t_C ,t_D times (Figure 6.7) are bigger than the time defined by parameters **"t on"**, **"toFF"** and **"unit"**. ***Border values*** means values equal ***threshold+hysteresis*** and ***threshold-hysteresis*** respectively.

If **"t on"** and **"toFF"** parameters are set to "0", then the relay state will be changed **as soon** as input value exceeds any of the ***border values*** (see points A and C, Figure 6.7 a, b, c).

If values of **"t on"** or/and **"toFF"** are positive, then relay state will be turned on if the input value exceeds the ***border values*** and stay bigger (or lower) during at least **"t on"** (see points B_{ON}, D_{ON}, Figure 6.7 a, d, e). Similarly, the relay will be turned off if time **"toFF"** elapse since the input signal value exceeds any of the ***border values*** (see points B_{OFF}, D_{OFF}, Figure 6.7 a, d, e).

If tA ,tB ,tC or tD (when input signal stay in ***zone A*** or ***zone B***) are lower than parameters “t on” or “toFF”, the relay will not change his state (see points A and C, Figure 6.7 a, d, e).

The state of relay output while the input value exceeds the ***border values*** (points A, B, C, D) is described by parameter **“modE”.** The relay can be turned on (**“modE”** = **”on”**), or turned off (**“modE”** = **”oFF”**) when input signal value is contained in ***zone A*** (Figure 6.7 a).

The parameter **“AL”** allow user to set the relay output behaviour in critical situations (e. g. Input values exceeds ***permissible measurement range***). User can select that the relays will be turned on, turned off,or not changed in critical situations.

All parameters connected with relay outputs are described in paragraph ***”rEL1” menu***.

6.3.2. Two thresholds mode

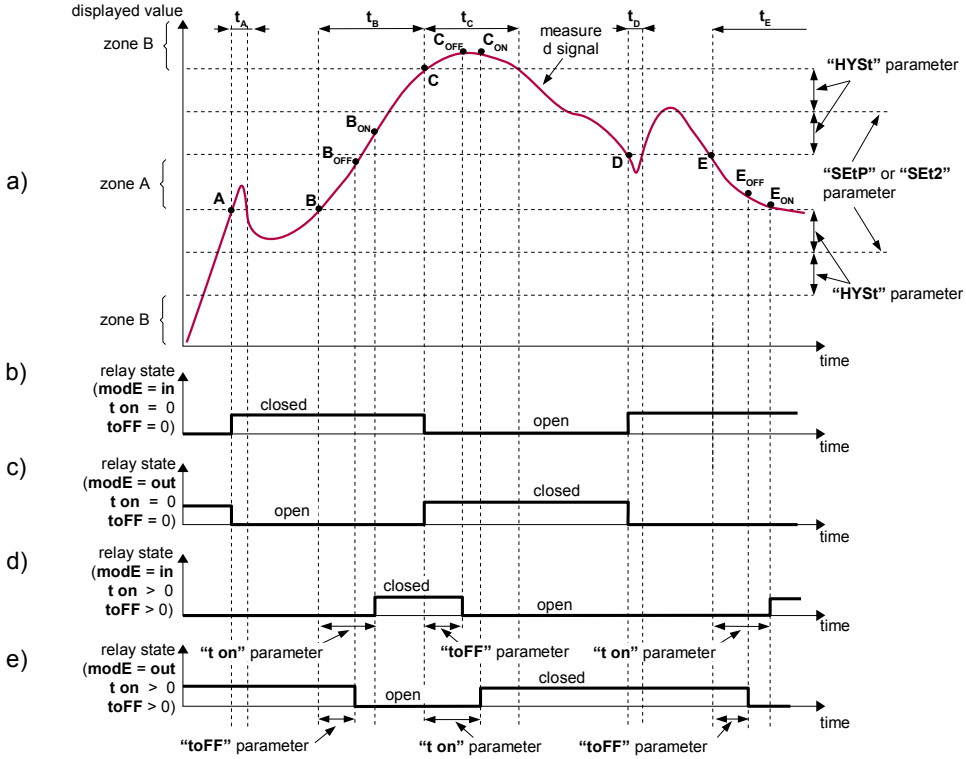

Objaśnienie:

A, B, C, D, E - points where measured signal exceeds border values (expected value ± allowed deviation)

B_{ON} ,B_{OFF} ,C_{ON} ,C_{OFF} ,E_{ON} ,E_{OFF} - relays state changes moments: (for **“t on”** > 0, **“toFF”** > 0)

t_A , t_B , t_C , t_D , t_E - time periods while input signal is in zone A or zone B

Figure 6.8. Principle of LED/relay output operation for two thresholds mode

Figure 6.8 presents the principle of relay outputs operation for two thresholds mode, and an example values of other parameters. In this mode parameter **"SEt2"** is accessible in common with **"SEtP"**, this parameter describes a second threshold of the relay output. The parameters **"HYSt"**, **"modE"**, **"t on"**, **"toFF"**, **"unit"** and **"AL"** are connected with both **"SEtP"** and **"SEt2"** thresholds. While the controlling process, the relay output changes his state depends of both **"SEtP"** and **"SEt2"** thresholds in similar way as it was described in one threshold mode.

If two threshold mode is used, **"modE"** parameter defines state of the relay output when the input value occurs in a particular zone defined by ***border values*** of both **thresholds**. The relay can be turned on if the input value is contained in ***zone A*** (**"modE" = "in"**) or ***zone B*** (**"modE" = "out"**) and turned off if it is contained in the second one (Figure 6.8).

The sequence of thresholds **"SEtP"** and **"SEt2"** can be set in any order, due to the control of relay outputs is done depend on difference between thresholds values (**zone A**) and outside of threshold values (**zone B**).

7. DEVICE PROGRAMMING

The device menu allow user to set all parameters connected to operation of measurement input, control modes, critical situations behaviour, communication via RS-485 and access settings. The meaning of the particular parameters is described in paragraph ***MENU DESCRIPTION***.

Some of the parameters can be accessed without menu entering (quick view mode). After pressing **[^]** or **[v]** button, name of the threshold (e.g.**"rEL1"**) and his value will be displayed on the display in alternating mode. If **[^]** or **[v]** will be pressed in 5 sec again, the next threshold will be displayed, else the device comes back to the measurement mode. If a ***free access*** is enabled (see description of ***"SECu" menu***), user can change the value of particular threshold pressing button **[ENTER]** (see: ***PARAMETERS EDITION***).

If particular parameter has been changed and confirmed in quick view mode, its new value is displayed in alternating mode with parameter name by few seconds. Confirmed changes may be checked or user can switch viewed parameter pressing **[^]** or **[v]** button.

7.1. PROGRAMMING MENU

To enter main menu (being in the measurement mode) operator must to press and hold at least 2 sec. **[ESC/MENU]** button.

If the user password is defined (see parameter **"Scod"**, menu ***"SECU"***), operator have to enter correct one before proceeding to menu options . Entering of the passwords is similar to the edition of numeric parameters (see: ***PARAMETERS EDITION***), however presently editing digit is showed only on the display, other digits are replaced by "-" sign.

After entering of last digit of the password first menu position will be displayed (if the password is correct) or warning "**Err**" in other case.

Pay attention when device parameters are being changed. If it is possible, turn off controlled installation (machine).

Functions of the buttons while sub-menu and parameters choice:



Selection of sub-menu or parameter for editing. Name of selected item (sub-menu or parameter) is displayed.



Operation of **[ENTER]** button depend on present menu position:

- if the name of some sub-menu is displayed - enter this sub-menu; name of the first parameter (or next level sub-menu) is displayed,
- if the name of some parameter is displayed - enter the edition of this parameter; present value of the parameter is displayed,



[ESC/MENU] button allow user to exit present menu level and goes to upper level menu (or measurement mode).



After about 1 min. since last use of the buttons, device exits the menu mode and returns to the measurement mode (only if no parameters are in editing mode).

7.2. PARAMETERS EDITION

To start edition of any parameter user should select name of desired one using **[^] [v]** buttons and then press **[ENTER]**.

7.2.1. Numeric parameters (digit change mode)

Numerical parameters are displayed as decimal numbers. The mode of its new value entering depends on chosen edit method (see parameter „**Edit**").

In mode "by digit" („**Edit**"="**dig**") pressing one of the keys **[^]** or **[v]** causes change of current position (flashing digit) or the sign (+/-). Short pressing of the **[ENTER]** button causes change of the position (digit).

Press **[ENTER]** at least 2 seconds to accept the changes, after that question **"SEt?"** is displayed, and user must to confirm (or cancel) the changes. To conform changes (and story it in EEPROM) press **[ENTER]** button shortly after **"SEt?"** is displayed. To cancel the changes press **[ESC]** button shortly after **"SEt?"** is displayed. After that device returns to the menu.

7.2.2. Numeric parameters (slide change mode)

In "slide change" mode („**Edit**"="**Slid**"), buttons **[^]** and **[v]** has different functions.

To increase edited value press (or press and hold) **[^]** button only, the increasing became quickest as long as button **[^]** is pressed. To slow down the increasing, button **[v]** can be used. If **[v]** is pressed shortly (and button **[^]** is still pressed), increasing slow down for a moment only, if **[v]** is pressed and held while button **[^]** is still pressed the increasing slow down and will be kept on lower speed.

To decrease edited value press (or press and hold) **[v]** button only. The decreasing became quickest as long as button **[v]** is pressed. To slow down the decreasing, button **[^]** can be used. If **[^]** is pressed shortly (and button **[v]** is still pressed), decreasing slow down for a moment only, if **[^]** is pressed and held while button **[v]** is still pressed the decreasing slow down and will be kept on lower speed.

Press **[ENTER]** at least 2 seconds to accept the changes, after that question **"Set?" is** displayed, and user must to confirm (or cancel) the changes. To conform changes (and story it in EEPROM) press **[ENTER]** button shortly after **"SEt?"** is displayed. To cancel the changes press **[ESC]** button shortly after **"SEt?"** is displayed. After that device returns to the menu.

7.2.3. Switch parameters ("LIST" type)

Switch parameters can be described as a sets of values (a lists) out of which only one of the options available on the list can be selected for the given parameter. Options of switching parameter are selected using **[^]**, **[v]** keys.

Short pressing of **[ENTER]** causes in displaying of the acknowledge question (**"SEt?"**). If key **[ENTER]** is pressed again, the changes are accepted, stored in EEPROM end the edition process finished. Pressing the key **[ESC]** after **"SEt?"** causes in cancelling of made changes and returning to menu.

Functions of buttons when editing numeric and switching parameters:



While editing numeric parameter:
- change of current (flashing) digit
- slide change of value (acceleration, deceleration, direction change)

While editing switch parameter - selection of switch parameter.



If numerical parameter is being edited, a short press of **[ENTER]** button change edited position. A long press of **[ENTER]** button (at lest 2 sec.) causes of display a **"SEt?"** ask, which allow user to make sure if change of the parameter value is correct. If switch parameter is being edited, a short press of **[ENTER]** button causes of display a **"SEt?"** ask. When **[ENTER]** button is pressed again (while **"SEt?"** is displayed) the new value of the parameter is stored in EEPROM memory.



Pressing this button operator can cancel the changes done up to now (if they were not approved by **[ENTER]** button after the **"SEt?"** ask) and come back to menu

7.3. MENU DESCRIPTION

"- - - -" - password checking. If some password different from „**0000**" is set, then every enter to main menu follows the entering of password. If entered password is correct then first menu position will be displayed else warning "**Err**", and unit returns to measurement mode.

Due to problem with direct displaying of "**m**" and "**K**" letters, they are exchanged with special signs " n̄ " for "m" and " ⊦ " for K respectively. However, in user manual letters „**m**" and "**K**" are used to make it more readable (example: **"modE", "tc K"**).

7.3.1. "rEL1" menu

This menu allows to configure the operation mode of relays and LEDs marked „**R**" (e.g. „**R1**").

If there are few relay outputs available, then every output has its own configuration menu (e.g. menu „**rEL2**" for relay (LED) „**R2**"). Principle of the relays operation is described in paragraph ***CONTROL OF THE RELAY OUTPUTS***.

- The relay outputs and LEDs (named **R**) can be controlled depend on both - the current value and the peak value (when peak detection is active) of the input signal.
- If device is not equipped with one or more relay outputs, menus refer to this relays are available, but apply to LED indicators only. In such case LEDs indicates exceeding of particular thresholds.

"SEtP" - first threshold of the relay (range -999 ÷ 9999). Negative values can be input by selecting a "-" sign on first digit (to change value use **[^]** and **[v]** buttons). **Threshold is the medium value of relay hysteresis.**

"SEt2" - second threshold of the relay (range -999 ÷ 9999). Negative values can be input by selecting a "-" sign on first digit (to change value use **[^]** and **[v]** buttons). This threshold is accessible when **"modE"** parameter is set to **„in"** or **„out"** value. **Threshold is the medium value of relay hysteresis.**

"HYSt" - hysteresis of relay (range 0 ÷ 999). Full hysteresis of the relay is equal to 2x **"HYSt"** parameter. The relay state can change when an input signal is out of **threshold-hysteresis** to **threshold+hysteresis** zone.

Presented parameters should be set to ensure that **"SEtP" + "HYSt", "SEt2" + "HYSt", "SEtP" - "HYSt"** or **"SEt2" - "HYSt"** does not exceed the measure range. Additionally, in two threshold mode ("**modE**"= „**in**" or „**out**"), the hysteresis for both thresholds must not cover each other (in other case relay can't change his state).

"modE" - relay operation mode:

"noAC" - the relay is not active (permanent turned off)

"on" - one threshold mode, the relay is turned **ON** when input signal exceeds **SEtP** + **HYSt** value**,** and is turned off back when the input signal became lower than **SEtP – HYSt**,

"oFF" - one threshold mode, the relay is turned **OFF** when input signal exceeds **SEtP** + **HYSt** value**,** and is turned on back when the input signal became lower than **SEtP – HYSt**,

"in" - two threshold mode, the relay is turned **ON** when the input signal is bigger than "***lower threshold*** + **HYSt**" and lower than "***bigger threshold*** – **HYSt**", and turned off when the input signal is contained in the second zone. The ***bigger threshold*** means bigger one of **"SEtP"** and **"SEt2"** thresholds, the ***lower threshold***" means lower one of **"SEtP"** and **"SEt2"** thresholds.

"out" - two threshold mode, relay is turned **ON** when the input value is bigger than "***bigger threshold*** + **HYSt"** and lower than "***lower threshold*** – **HYSt"**, and turned on when the input signal is contained in the second zone. The ***bigger threshold*** means bigger one of **"SEtP"** and **"SEt2"** thresholds, the ***lower threshold***" means lower one of **"SEtP"** and **"SEt2"** thresholds.

"modb" - the relay is controlled via RS-485 interface, independently on the input signal.

- **LEDs light when relays are closed**, independently of relays' mode.
- When power supply fail, unit do not store relays state selected by RS-485 interface.

"t on" - turn on delay time, the relay is turned on with delay equal **"t on"** if the input value exceeds appropriate ***border value*** (defined with ***threshold*** and ***hysteresis***), at least **"t on"** time. **"t on"** range 0 ÷ 99.9, defined with 0.1 sec. resolution. Unit of this parameter is set by **"unit"** parameter.

"toFF" - turn off delay time, the relay is turned off with delay equal **"toFF"** if the input value exceeds appropriate ***border value*** (defined with ***threshold*** and ***hysteresis***), at least **"toFF"** time. **"toFF"** range 0 ÷ 99.9, defined with 0.1 sec. resolution. Unit of this parameter is set by **"unit"** parameter.

If time when the input signal exceeds some border value is shorter than **"t on"** or **"toFF"** time, the relay do not change its state (see paragraph: ***CONTROL OF THE RELAY OUTPUTS***).

"unit" - unit of time for **"t on"** i **"toFF"** parameters. Can be set on one of two values:

"min" - minutes,
"SEC" - seconds.

"AL" - this parameter defines the relay reaction when some critical situations occurs:

"noCH" - relay do not change his state,
"on" - relay will be turned on,
"oFF" - relay will be turned off.

If parameter **"modE"** is set to **"on"** , **"oFF"**, **"in"** or **"Out"** the "critical situation" means that allowable measurement range is exceeded.
If parameter **"modE"** is set to **"modb"**, the "critical situation" means communication delay (when no data is received) longer than **"mbtO"** parameter (see description: ***"rS" menu***).

- If option "**noCH**" is selected for **"AL"** parameter, behaviour of the relay may depend on "FiLt" parameter in some cases. If "FiLt" is set to big value and the input signal drops, result value of the measure will change slow, causes of turning on or off relay due to thresholds values. The critical situation is slowly detected, so it is impossible to predict the relay state in that situations.
- If parameter „**AL**" = „**on**", the relay will be turned on in the critical situations, even if his parameter ***"modE"*** = ***"noAC".***

7.3.2. "bEEP" menu

This menu contains options connected with acoustic signal :

"**AL**" - if this parameter is set to "**on**", any critical situation causes by acoustic signal
"**r1**" - if this parameter is set to "**on**", activation of relay **R1** causes by acoustic signal
"**r2**" - if this parameter is set to "**on**", activation of relay **R2** causes by acoustic signal
"**r3**" - if this parameter is set to "**on**", activation of relay **R3** causes by acoustic signal
"**r4**" - if this parameter is set to "**on**", activation of relay **R4** causes by acoustic signal

Acoustic signal (turned on by e.g. relay) can be turned off by pressing of any button

7.3.3. "inPt" menu (common parameters)

This menu presets the measurement input:

"**tYPE**" - type of the input / sensor. This parameter can be set to values:

"0-20" - current input - range 0..20 mA,
"4-20" - current input - range 4..20 mA,

"0-5" - voltage input - range 0..5 V,
"1-5" - voltage input - range 1..5 V,
"0-10" - voltage input - range 0..10 V,
"2-10" - voltage input - range 2..10 V,

"60" - voltage input - range 0..60 mV,
"75" - voltage input - range 0..75 mV,
"100" - voltage input - range 0..100 mV,
"150" - voltage input - range 0..150 mV,

"Pt 1" - Pt 100 input,
"Pt 5" - Pt 500 input,
"Pt10" - Pt 1000 input,

"tc k" - thermocouple input, type K,
"tc S" - thermocouple input, type S,
"tc J" - thermocouple input, type J,
"tc t" - thermocouple input, type T,
"tc n" - thermocouple input, type N,
"tc r" - thermocouple input, type R,
"tc b" - thermocouple input, type B,
"tc E" - thermocouple input, type E.

For current and voltage inputs displayed values are defined by parameters **"Lo C"**,**"Hi C"** (or by user defined characteristic points) and parameter **"Pnt"**.

"FiLt" - option allows to change the filtration time constant. Expressed in seconds. Acceptable values range from 0 (no filtration) to 255.

7.3.4. "inPt" menu (parameters of temperature inputs)

"Conn" - connection method of RTD input. This parameter can be set to values:
- ***"4 in"*** - 4-wire method,
- ***"3 in"*** - 3-wire method,
- ***"2 in"*** - 2-wire method.

"toFS" - offset expressed in °C, range ± 9.9°C (for RTD input) or ± 99°C (for TC input). This parameter allows shifting of measurement scale, and express value added to calculated (measured) result.

The offsetting of a scale is realised independently of cold ends automatic compensation.

7.3.5. "inPt" menu (parameters of current and voltage inputs)

"CHAr" - this option presets type of the conversion characteristic, and can be set to:

- ***"Lin"*** - linear
- ***"Sqr"*** - square
- ***"Sqrt"*** - square root

} When one of those characteristics is chosen display range is defined by **"Lo C"** and **"Hi C"**.

"USEr" - user defined characteristic. Maximal length 20 points. Every point is defined by user. Adding, Editing and Deleting of points is done by options „**AddP**", „**EdtP**", „**dELP**" („**InPt**" menu) respectively.

If user defined characteristic is selected, and if number of defined points is lower than 2 then warning "**Errc**" is displayed in measurement mode.

The process of displayed result calculation is described in details in ***DISPLAY VALUES CALCULATION*** paragraph.

"Pnt" - decimal point position. It can be set to one of:
" 0", " 0.0", " 0.00", "0.000"
Decimal point position is changed by **[^]**, **[v]** buttons.

"Lo C"
"Hi C" These parameters describe the values displayed for minimum and maximum input current. For example, if input type is set to 4-20 mA **"Lo C"** parameter defines the value displayed when input current is equal 4 mA, and **"Hi C"** parameter defines the value displayed for 20 mA of input current. Available range for these parameters: -999 ÷ 9999. Negative values can be set by entering **'-'** sign on the first position (by use of **[^]**, **[v]** buttons).

If user defined characteristic is selected (parameter **"CHAr" = "USEr"**) the parameters „**Lo C**" and „**Hi C**" are not available for modification, due to their values are calculated from defined characteristic.

"AddP" - this menu allow user to add single point to the user defined characteristic. After selection of this option device waits for „**X**" and „**Y**" coordinates of new point. Modification of the coordinates is done accordingly to numerical parameters edition. Coordinate „**X**" defines the percentage ratio of input current to selected current range. The „**X**" range: -99,9 ÷ 199,9. Coordinate „**Y**" defines displayed value for particular „**X**" value. The „**Y**" value can be changed in range: -999 ÷ 9999, decimal point position depend on **„Pnt"** parameter (menu **"inPt "**).

- User can not enter two points with the same value of „**X**" coordinate. If user trays to do it, **"Err"** warning is displayed. To modify any defined point use **"EdtP"** option.
- To distinguish „**X**" and „**Y**" coordinates, if „**X**" coordinate is displayed an additional decimal point on utmost right position is displayed.
- If user defined characteristic is selected, and if number of defined points is lower than 2 then warning "**Errc**" is displayed in measurement mode.

"dELP" - this option allows user to delete any of the points of the user defined characteristic. After selection current number of points of the user defined characteristic is displayed for about approx. 1.5 sec. After that device waits for selection of point being deleted (by **[^]**, **[v]** buttons). The short pressing of **[ENTER]** button causes by switching between **X** and **Y** value of the displayed point. The long press (press and hold at least 2 sec) of **[ENTER]** button causes by displaying **„dEL?"** ask. If **[ENTER]** button is pressed again, current point is deleted and new updated number of points of the user defined characteristic is displayed.

"EdtP" - this option allows user to modify of particular point of the user defined characteristic. After selection current number of points of the user defined characteristic is displayed for about approx. 1.5 sec. After that device waits for selection of point being edited (by **[^]**, **[v]** buttons). The short pressing of **[ENTER]** button causes by switching between **X** and **Y** value of the displayed point. The long press (press and hold at least 2 sec) of **[ENTER]** button causes by entering to edit the selected coordinate of the point. Modification of the coordinates is done accordingly to numerical parameters edition.

"AddP", **"dELP"** and **"EdtP"** options are available only if the user defined characteristic is used (it means when parameter **"CHAr" = "USEr"**).

"Lo r", **"Hi r"** - these parameters define the expansion of nominal range in percent. They determine the permissible range of input signal (Figure 7.1).

The permissible range allow user to exceed the ***nominal range*** of input signal. If input value is contained in the permissible range a proper result is displayed. If input signal exceeds this range (defined by **"Lo r"** and **"Hi r"**), **"-Lo-"** or **"-Hi-"** warning is displayed depend on input signal value.

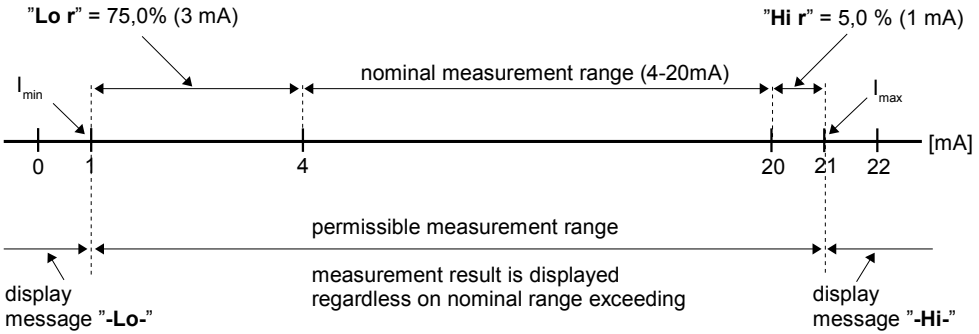

*Figure 7.1 Example of definition of permissible range of input signal - "**Lo r**" and "**Hi r**" parameters (**"4-20"** mode)*

The **"Lo r"** parameter is important if input is set to **"4-20"**, **"1-5"** or **"2-10"** mode only, and determines lower border of the permissible range. In the other cases (for current and voltage ranges), lower border of the permissible range is always 0.
For example if input is set to **"4-20"** mode, then lower border is calculated due to expression: I_{min} = 4 mA - 4 mA × **"Lo r"** %.
The **"Lo r"** value can be set from 0 to 99.9%.
Parameter **"Hi r"** determines the upper border of the permissible range accordingly to the expression (for all modes).
For example if input is set to **"4-20"** mode, then upper border is calculated due to expression: I_{max} = 20 mA + 20 mA × **"Hi r"** %.
The value of **"Hi r"** can be set from 0 to 19.9%

In example no 1 of the ***DISPLAY VALUES CALCULATION*** paragraph the procedure of the permissible input range determining is presented in details.

If the measurement value do not exceeds ***permissible measurement range*** but displayed value exceeds range -999 ÷ 9999, the warning **"-Ov-"** is displayed rather than the calculated result.

7.3.6. "OutP" menu

This menu contains parameters of analogue output control. Menu is available if the device is equipped witch analogue output.

Analogue output can be controlled depend on both present measured value and peak value (if peak detection is enabled).

"Omod" - analogue output mode. Depending on version of the device there are following options:

For active current output:
- *"**oFF**"* - current output disabled,
- *"**0-20**"* - current output enabled with 0 ÷ 20 mA mode,
- *"**4-20**"* - current output enabled with 4 ÷ 20 mA mode,
- *"**modb**"* - current output controlled via RS-485 interface.

For passive current output:

*"**oFF**"* - current output disabled,
*"**4-20**"* - current output enabled with 4 ÷ 20 mA mode,
*"**modb**"* - current output controlled via RS-485 interface.

For active voltage output:

*"**oFF**"* - voltage output disabled,
*"**0-5**"* - voltage output enabled with 0 ÷ 5V mode,
*"**1-5**"* - voltage output enabled with 1 ÷ 5V mode,
*"**0-10**"* - voltage output enabled with 0 ÷ 10V mode,
*"**2-10**"* - voltage output enabled with 2 ÷ 10 V mode,
*"**modb**"* - voltage output controlled via RS-485 interface.

"OUtL" - this parameter determines the input value for which the output signal is **minimal** (depend of output mode „**Omod**").

"OUtH" - this parameter determines the input value for which the output signal is **maximal** (depend of output mode „**Omod**").

The analogue output value is calculated due to formula given below:

$$Out = \frac{W - "OUtL"}{"OUtH" - "OUtL"} \times (B - A) + A$$

where: **W** – displayed value,
Out – analogue output value,
B – higher range limit (20mA / 5V / 10V),
A – lower range limit (0mA / 4mA / 0V / 1V / 2v),

"**OutL**" parameter can be greater than "**OutH**". In this case the conversion characteristic is reversed, it means that if input value raises the output value falls.

"**Lo r**", "**Hi r**" - this parameters define the output value range. If calculated output value **Out** exceeds defined range then analogue output generates signal equal to upper or lower border of the defined range. These parameters defines the percentage extension of nominal analogue range (with 0,1% resolution).

Parameter "**Lo r**" defines lower border of the range due to formula:
$\mathbf{Out}_{min}$ **= A** - (**A** × "**Lo r**" %), where:
A – lower signal value range limit.
This parameter can be set from 0 to 99.9% (for active current output and active voltage output) or from 0 to 29.9% (for passive current output).

Parameter **"Hi r"** defines higher border of the range due to formula:
$\mathbf{Out}_{max}$ **= B** + (**B** × "**Hi r**" %), where:
B – higher signal value range limit.
This parameter can be set from 0 to 19.9% (for active and passive current output) or from 0 to 9.9% (for active voltage output).

In example on page **45** of the ***DISPLAY VALUES CALCULATION*** paragraph the procedure of the analogue outputs determining is presented in details.

"**AL**" - this parameter determines the behaviour of analogue output if any critical situation occurs. According to version of the device, this parameter can be set:

For active current output:
- ***"noCH"*** - current will not change,
- ***"22.1"*** - current will be set to 22.1 mA,
- ***"3.4"*** - current will be set to 3.4 mA,
- ***"0.0"*** - current will be set to 0 mA.

For passive current output:
- ***"noCH"*** - current will not change,
- ***"22.1"*** - current will be set to 22.1 mA,
- ***"3.4"*** - current will be set to 3.4 mA,

For active voltage output:
- ***"noCH"*** - voltage will not change,
- ***"11.0"*** - voltage will be set to 11 V,
- ***"5.5"*** - voltage will be set to 5.5 V,
- ***"1.2"*** - voltage will be set to 1.2 V.
- ***"0.6"*** - voltage will be set to 0.6 V,
- ***"0.0"*** - voltage will be set to 0 V.

When the critical situation goes, the output signal will be set to value calculated due to formulas given above.

7.3.7. "bri" parameter

This parameter allows user to set bright of the LED display, bright can be set to conventional values from 1 to 8.

7.3.8. "HOLd" menu

This menu contains parameters connected with peak detection function. See also full description of the peak detection function in paragraph: ***DETECTION OF THE PEAK VALUES***

"modE" - the type of detected changes of the input signal, can be set to values:

- ***"norm"*** - peaks, peak and next drop of the input signal of value equal at least **"PEA"**,
- ***"inv"*** - drops, drop and next peak of the input signal of value equal at least **"PEA"**,

"PEA" - minimal detected signal change classified as peak or drop (see Figure 6.4)

"timE" - maximum time of displaying of the peak (drop) value, can be set from 0.0 to 19.9 sec, with 0.1 sec. resolution. If „**HdiS**"="**HOLD**" then setting parameter **"timE"=0.0** causes holding peak value until **[ESC]** button is pressed. If „**HdiS**"="**rEAL**" then value **"timE"=0.0** means no holding.

"HdiS" - type of displayed values:

"rEAL" - current value is displayed,
"HOLd" - peak (drop) value is displayed,

"H r1" ÷ "H r4"- relay/LED outputs (R1÷R4) operation mode:

"rEAL" - relay/LED operates depend on the current value,
"HOLd" - relay/LED operates depend on the peak (drop) value.

"HOUt" - current output operation mode:

"rEAL" - current output operates depend on the current value,
"HOLd" - current output operates depend on the peak (drop) value.

7.3.9. "SECu" menu

This menu contains presets connected with availability of other parameters:

"Scod" - user password (4-digits number). If this parameter is set at value **"0000"**, user password is turned off.

If the user do not remember his password, the access to the menu is possible by the "one-use password". To get this password please contact with Marketing Division. "Single use password" can be used only one time, after that it is destroyed. Entering this password causes in clearing of user password, it means sets the user password to „0000".

The "one-use password" can be used **ONE TIME ONLY**, it is impossible to use it again! The "one-use password" can be restored by Service Division only.

"A r1 ÷ A r4" - this option permits user (**"on"**) or prohibits (**"oFF"**) to modify the thresholds of the relays/LEDs R1 ÷ R4 without knowledge about user password.

7.3.10. "rS" menu

This menu is connected with RS-485 interface, and sets his properties:

"Addr" - this parameter defines the address of the device, accordingly to Modbus protocol. It can be set in range from 0 to 199. If the value 0 is set then device, responds to frames with address 255 (FFh).

"bAud" - this parameter determines RS-485 interface baud rate. It can be set to one of 8 possible values: **"1.2"**, **"2.4"**, **"4.8", "9.6"**, **"19.2"**, **"38.4"**,**"57.6"**,**"115.2"**, which respond to the baud rates of 1200, 2400, 4800, 9600, 19200, 38400, 57600 and 115200 bit/s respectively.

"mbAc" - this parameter sets the access to the configuration registers of the device. Possible values:
"on" - configuration registers can be set via RS-485 interface,
"oFF" - configuration registers can not be set via RS-485 interface.

The access to registers no 04h i 05h cant be denied by **"mbAc"** parameter (see: ***LIST OF REGISTERS***).

"mbtO" - this parameter defines maximal time (sec) between following frames received by the device. If the delay will be greater than the value of **"mbtO"** parameter, the relays and analogue outputs which are controlled via RS-485 interface, will set to alert state (see ***"OUtP" menu,*** and ***"rEL1" menu*** description). Parameter "**mbtO**" can be set to values from 0 to 99 seconds. The value 0 means that the time will be not controlled.

"rESP" - this parameter defines minimal (additional) delay between the Modbus message and the answer of the device (received and sent via RS-485 interface). This additional delay allows the device to work with poor RS-converters which do not works properly on baud rates higher than 19200. This parameter can be set to one of values:

"Std" - answer as quick as possible, no additional delay

" 10c"
" 20c"
" 50c"
"100c"
"200c" } - answer delayed of 10, 20, 50, 100 of 200 chars respectively, where one character time depends on selected baud rate

In the most cases parameter **"rESP"** should be set to **"Std"** (no additional delay). Unfortunately for some third party RS-converters **"rESP"** should be adjusted experimentally. Table 7.1 contains most frequently used values.

"bAud" parameter	"38.4"	"57.6"	"115.2"
"rESP" parameter	" 10c"	" 20c"	" 50c"

*Tab.7.1. Settings of **"rESP"** parameter*

7.3.11. "Edit" parameter

This parameter allows to change the edition mode of numerical parameters:
"dig" - the change to "by digit" mode,
"Slid" - slide change mode.

7.3.12. "dEFS" parameter

This setting allows to restore the factory settings of the device. To get the access to this option special password is required: „5465", next the device displays acknowledge question **„SEt?"**. Press **[ENTER]** to acknowledge the restoring of factory settings or **[ESC]** to cancel.

7.3.13. "SErv" menu

This menu contains the parameters for authorized service only. To enter this menu proper service password must be entered. Improper settings can causes of damage of the device.

7.4. MENU STRUCTURE

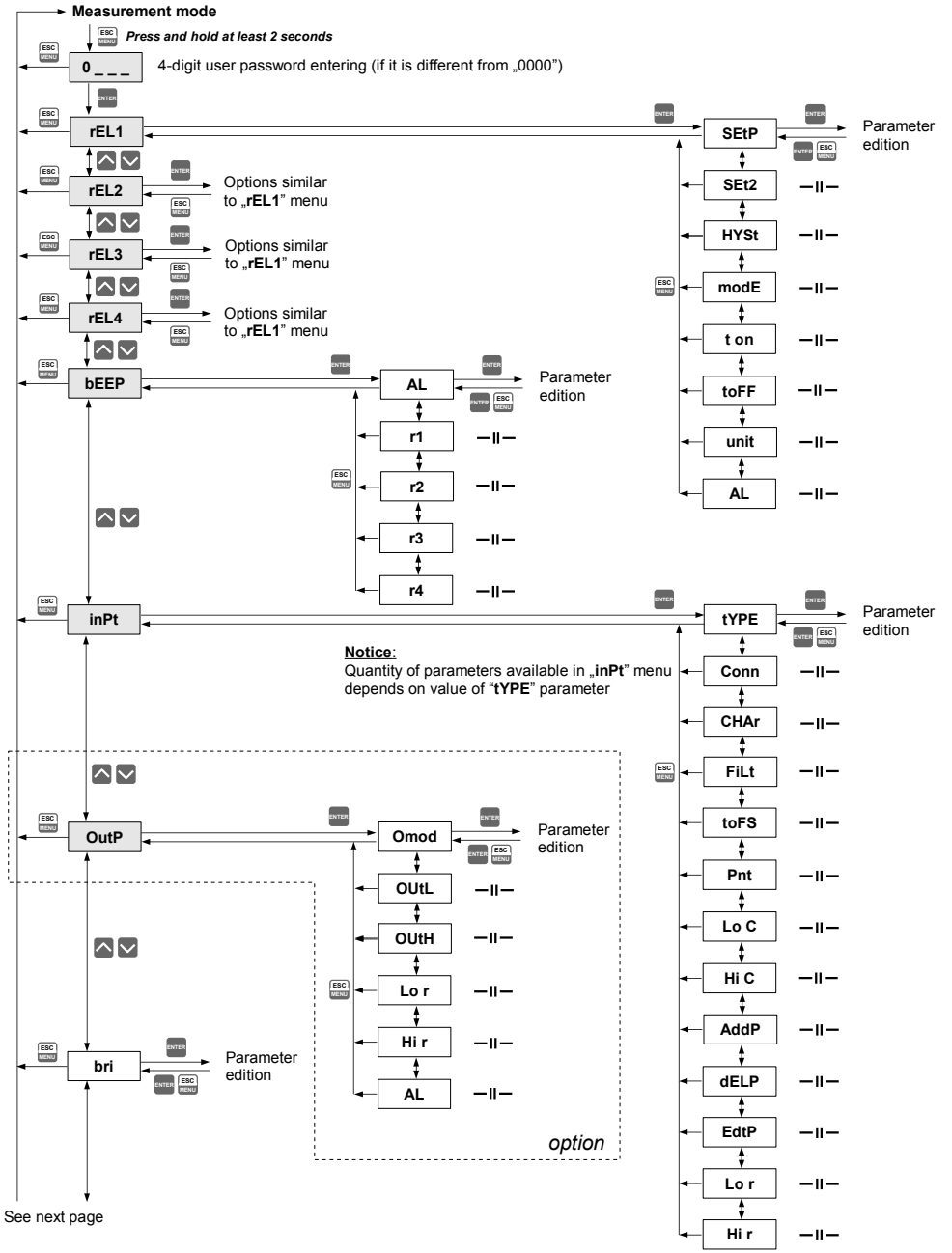

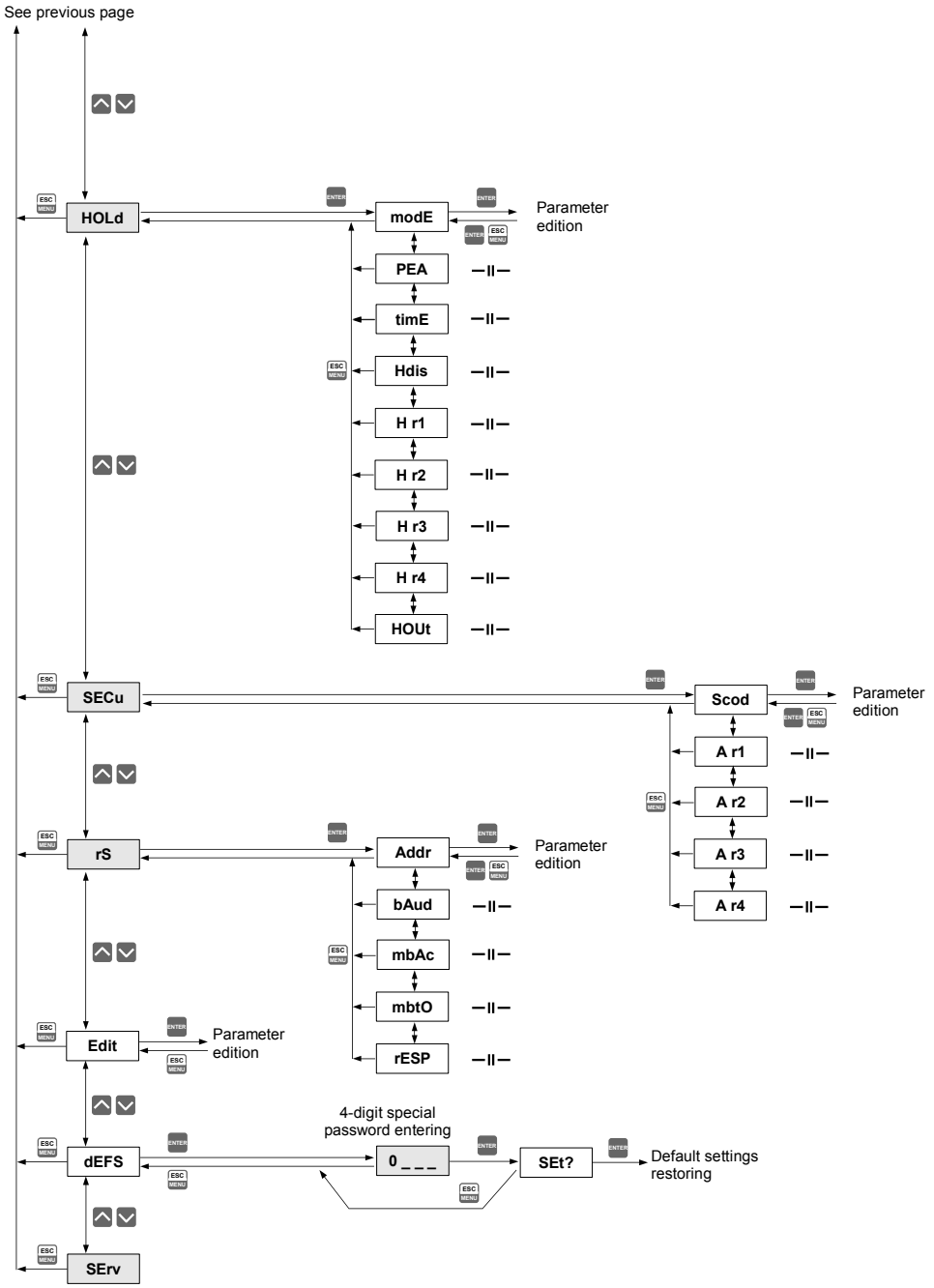
See previous page
HOLd
modE
Parameter edition
PEA
timE
Hdis
H r1
H r2
H r3
H r4
HOUt
SECu
Scod
A r1
A r2
A r3
A r4
rS
Addr
bAud
mbAc
mbtO
rESP
Edit
dEFS
0 _ _ _
SEt?
Default settings restoring
4-digit special password entering
SErv

8. THE ALARM LED

Alarm LED (**AL**) lights in cases:
- exceeding of ***permissible measurement range***
- detection of sensor malfunction (shortcut or break of measurement circuit)

9. OVER-CURRENT PROTECTION

The current input of the device is equipped with over-current protection circuit. This circuit protects the standard resistor to damage. Maximum input current is set to 50mA (typical).
When temperature of the standard resistor falls, the protection circuit will turn off himself automatically, and the device will measure the input current again. Due to thermal phenomenon in the standard resistor, precision of the measurement may be lower, during few minutes (up to the standard resistor temperature will falls to the environment temperature).

10. DISPLAYED VALUES CALCULATION

For simplicity of examples it's assumed that current input is selected, and all calculations are related to this input. When voltage input is selected calculations are similar (be sure of particular ranges and units).

The first step to compute the result of measure is the calculation of the normalized result (it means result of 0-1 range). To do it, the begin of the input range (0 mA for 0-20mA range, and 4mA for 4-20mA range) must be subtracted from measured value. Next, received result must be divided by the width of the input range (it means 20mA for 0-20mA range, and 16mA for 4-20mA range). So normalized result can be expressed by expressions:

$$I_n = \frac{I_{inp.} - 4}{16} \qquad for \quad 4 \div 20\,mA \quad range$$

$$I_n = \frac{I_{inp.}}{20} \qquad for \quad 0 \div 20\,mA \quad range$$

where $I_{inp.}$ Means input current (in mA), and I_n – normalized result.

If measured value exceeds the nominal input range (0-20mA or 4-20mA), and do not exceed the permissible input range, then received normalized I_n result will exceed 0-1 range, e.g. input range 4-20 mA, input current = 3 mA – the normalized result is equal -0,0625, and for input current = 22 mA, the normalized result is equal 1,125. In such cases presented expressions are still correct.

10.1. ADDITIONAL CALCULATIONS (USED CONVERSION CHARACTERISTIC)

The manner of the additional computation of the displayed result depends on selected conversion characteristic. All presented charts are connected with the input range 4 - 20 mA.

10.1.1. Linear characteristic

The normalized result is converted by fixed coefficients determined by **"Lo C"** and **"Hi C"** parameters (when the normalized results is equal 0, then value **"Lo C"** is displayed, and when the normalized results is equal 1, then value **"Hi C"** is displayed). Expression presented below shows the manner of result calculation:

$$W = I_n \times ("Hi\ C" - "Lo\ C") + "Lo\ C",$$

where **W** means the displayed value.

The value of the **"Lo C"** parameter can be higher than the value of **"Hi C"** parameter. In such a case, for an increasing value of input current the displayed value decreases.

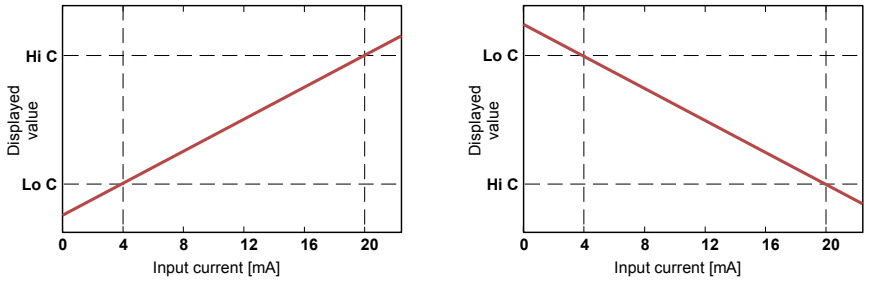

Figure. 10.1 Normal („Lo C" < "Hi C) and inverted („Lo C" > "Hi C) characteristic

10.1.2. Square characteristic

The normalized result is squared and further conversion is done as for linear characteristic. Conversion is made accordingly with the expression:

$$W = I_n^2 \times ("Hi\ C" - "Lo\ C") + "Lo\ C",$$

where **W** means the displayed value.

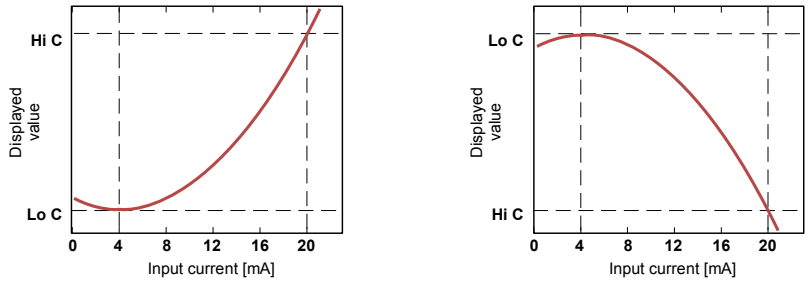

Figure. 10.2 Normal („Lo C" < "Hi C) and inverted („Lo C" > "Hi C) characteristic

10.1.3. Square root characteristic

The normalized result is rooted and further conversion is done as for linear characteristic. Conversion is made accordingly with the expression:

$$W = \sqrt{I_n} \times ("Hi\ C" - "Lo\ C") + "Lo\ C",$$

where W means the displayed value.

Showed above expression is not valid when normalized result is negative. It is possible for 4-20 mode only. In this case (I_n<0) the displayed result is equal **"Lo C"** (see graphs below).

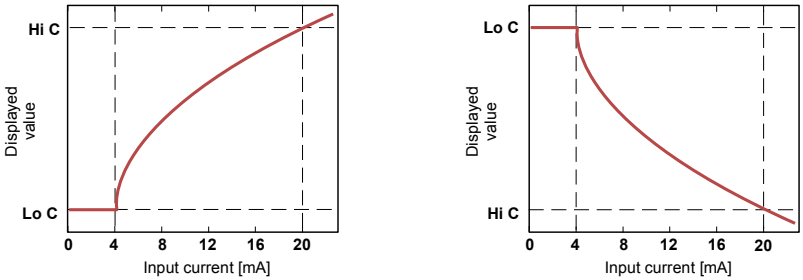

Figure. 10.3 Normal („Lo C" < "Hi C) and inverted („Lo C" > "Hi C) characteristic

10.1.4. User defined characteristic

User defined characteristic is defined as set of X-Y points. Number of the points is variable and may be set from 2 to 20 points which make linear segments (see graph and see ***Menu "inPt"***). Due to the normalized result I_n, the device computes specific segment, e.g. for characteristic from figure below, and I_n = 0,65 the segment between points X = **"50.0."** and X = **"70.0."** will be chosen.
Let's mark those points as PL (point low) i PH (point high) - in this example PL= **"50.0,"** and PH = **"70.0."**, and the normalized result I_n for the point PL as I_p (in this example I_p = I_n(PL) = 0,5). The displayed result is calculated accordingly to the expression:

$$W = (I_n - I_p) \times \frac{[Y(PH) - Y(PL)]}{[X(PH) - X(PL)]} \times 100 + Y(PL)$$

where Y(PH), X(PH), Y(PL), X(PL) mean values of X and Y coordinates of PH i PL points.

If the normalized result exceeds the user defined characteristic values, then specific utmost segment, defined by two next points, is used for calculations. If characteristic from figure below is used, and if I_n>1 then segment defined by points X(PL) = **"90.0."**, X(PH) = **"100.0."** will be used.

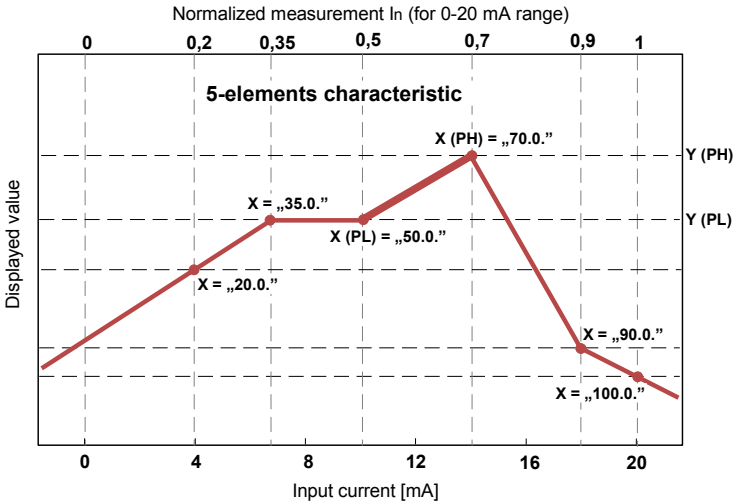

Figure. 10.4 Example of user defined characteristic

10.2. EXAMPLES OF CALCULATIONS

Example 1: ***Selection of the permissible input range ("4-20" mode)***

If in "**4-20**" mode the user sets **"Lo r"** = 20,0% and **"Hi r"** = 10,0%, then permissible input currents range will be equal: 3,2 mA ÷ 22 mA. Lower border of the range is the result of calculations: 4 mA - 4 mA × 20%, and the higher : 20 mA + 20 mA × 10%.

Example 2: ***The normalized I_n result calculation***

Let the input mode = 4-20 mA. The normalized I_n result is calculated accordingly to the expression on page 40, so if I_{in} = 10 mA then 10 mA - 4 mA = 6 mA, and this result should be divided by the width of input range (16 mA). Finally the normalized result: I_n = 6/16 = 0,375.

In case when input current exceeds nominal measurement range, calculations are similar. For example if input current is equal 2,5 mA then I_n = (2,5 - 4)/16 ≅ -0,0938, and if input current is equal 20,5 mA then I_n = (20,5 - 4)/16 ≅ 1,0313.

Example 3: ***The linear characteristic***

Let the input mode = 4-20 mA, and parameters **"Lo C"** and **"Hi C"** equal to -300 and 1200 respectively. The calculations will be done for three different input currents from example 2.

a) I_{in} =10 mA and I_n = 0,375
Accordingly to expression on page 41 for linear characteristic:
0,375 × [1200 -(- 300)] ≅ 562 and next, the **"Lo C"** value is added to the result , so the displayed value:
W ≅ 562 + (-300) = 262

b) I_{in} = 2,5 mA and I_n = -0,0938.
W ≅ -441.

c) I_{in} = 20,5 mA and I_n = 1,0313.
W ≅ 1247.

***Example 4:* The square characteristic**

Let the input mode = 4-20 mA, and parameters **"Lo C"** and **"Hi C"** equal to -300 and 1200 respectively. The calculations will be done for there different input currents from example 2.

a) I_{in} =10 mA and I_n = 0,375
Accordingly to expression on page 41 for square characteristic: $(0,375)^2$ × [1200 -(- 300)] ≅ 211.
and next, the **"Lo C"** value is added to the result , so the displayed value:
W ≅ 211 + (-300) = -89

b) I_{in} = 2,5 mA and I_n = -0,0938.
W ≅ -287.

c) I_{in} = 20,5 mA and I_n = 1,0313.
W ≅ 1295.

***Example 5:* The square root characteristic**

Let the input mode = 4-20 mA, and parameters **"Lo C"** and **"Hi C"** equal to -300 and 1200 respectively. The calculations will be done for there different input currents from example 2.

a) I_{in} =10 mA and I_n = 0,375
Accordingly to expression on page 42 for square root characteristic:
$\sqrt{0,375}$ × [1200 -(- 300)] ≅ 919.
and next, the **"Lo C"** value is added to the result , so the displayed value:
W ≅ 919 + (-300) = 619

b) I_{in} = 2,5 mA and I_n = -0,0938 , normalized result is negative , so the displayed value is equal to **"Lo C"** parameter: W ≅ **"Lo C"** = -300.

c) I_{in} = 20,5 mA and I_n = 1,0313.
W ≅ 1223.

***Example 6:* The user defined characteristic**

Let the input mode = 4-20 mA, and the user selected the 10 segment characteristic. To do this it is necessary to enter X and Y coordinates of 11 points (see ***Menu "inPt"***).
The calculations will be done for three different input currents from example 2, so in calculations some of the segments will be used only.

Let the following points will be given:
X1 = **"00.0."**, Y1 = **"-50.0"**,
X2= **"10.0."**, Y2 = **"-30.0"**,
....
X6 = **"30.0."**, Y6 = **"30.0"**,
X7 = **"40.0."**, Y7 = **"80.0"**,
....
X10 = **"90.0."**, Y10 = **"900.0"**,
X11 = **"100.0."**, Y11 = **"820.0"**,

Additionally all other points must to be defined and stored in the device memory.

a) I_{in} =10 mA and I_n = 0,375

The segment defined by X6 = **"30.0."** and X7 = **"40.0."** for this I_n will be selected. Accordingly to expressions given for user defined characteristic (see page 42) X6(PL) = 30, Y6(PL) = 30, X7(PH) = 40**,** Y7(PH) = 80 and I_p = 0,3 , the displayed value :

$$W = (I_n - I_p) \times \frac{[Y(PH) - Y(PL)]}{[X(PH) - X(PL)]} \times 100 + Y(PL) =$$

$$= (0{,}375 - 0{,}3) \times \frac{[80 - 30]}{[40 - 30]} \times 100 + 30 \simeq 67$$

b) I_{in} = 2,5 mA and I_n = -0,0938, because of the normalized I_n value is lower than 0, the segment defined by X1 and X2 will be selected. X1(PL) = 0, Y1(PL) = -50, X2(PH) = 10**,** Y2(PH) = -30 and I_p = 0. For these values the displayed value W ≅ -69.

c) I_{in} = 20,5 mA and I_n = 1,0313. , because of the normalized I_n value is higher than 1, the segment defined by X10 and X11 will be selected, and X10(PL) = 90, Y10(PL) = 900, X11(PH) = 100**,** Y11(PH) = 820 and I_p = 0,9 for these values the displayed value W ≅ 795.

***Example 7:* Current output value calculation**

Let the current output parameters be:
"modE" = **"4-20"**, **"OUtL"** = 100, **"OUtH"** = 200, **"Lo r"** = 5.0, **"Hi r"** = 5.0
Parameters **"Lo r"** and **"Hi r"** define working range of current output to 3.8 ÷ 21 mA.
Output current will be calculated for three displayed values „D":

a) D = „17.5"
According to formula from page 34:
I_{out} = (17.5-10.0) / (20.0-10.0) × 16 mA + 4 mA = 0.75 ·16 + 4 = 16 mA

Calculated I_{out} do not exceeds the output working range (3.8 - 21 mA).

b) D = „20.5”
According to formula from page 34:
I_{out} = (20.5-10.0) / (20.0-10.0) × 16 mA + 4 mA = 1.05 ·16 + 4 = 20.08 mA
Calculated I_{out} do not exceeds the output working range (3.8 - 21 mA).

c) D = „30.0”
According to formula from page 34:
I_{out} = (30.0-10.0) / (20.0-10.0) × 16 mA + 4 mA = 2 ·16 + 4 = 36 mA.
Calculated I_{out} exceeds the output working range (3 - 21 mA), so current output will generate current equal to the upper border of range defined by parameter **“Lo r”** i **“Hi r”** (it means 21 mA).

11. THE MODBUS PROTOCOL HANDLING

Transmission parameters: 1 start bit, 8 data bits, 1 or 2 stop bit (2 bits are send, 1 and 2 bits are accepted when receive), no parity control
Baud rate: selectable from: 1200 to 115200 bits/second
Transmission protocol: MODBUS RTU compatible

The device parameters and display value are available via RS-485 interface, as HOLDING-type registers (numeric values are given in U2 code) of Modbus RTU protocol. The registers (or groups of the registers) can be read by 03h function, and wrote by 06h (single registers) or 10h (group of the registers) accordingly to Modbus RTU specification. Maximum group size for 03h and 10h functions can not exceeds 16 registers (for single frame).

The device interprets the broadcast messages, but then do not sends the answers.

11.1. LIST OF REGISTERS

Register	*Write*	*Range*	*Register description*
01h	No	-999 ÷ 9999	Measurement value (no decimal point)
02h	No	0h, A0h, 60h, C0h, 10h, 20h	The status of the measurement; **0h** - data valid; **A0h** - top border of the measurement range is exceeded; **60h** - bottom border of the measurement range is exceeded; **C0h** - sensor failure; **10h** - error of user characteristic; **20h** - waiting for the first measure
03h	Yes	0 ÷ 3	“**Pnt** ” parameter in “**InPt**” menu (decimal point position) **0** - “ **0**”; **1** - “ **0.0**”; **2** - “ **0.00**”; **3** - “**0.000**”
04h	Yes	see descr.	State of the relays and alarm LED (binary format) (1 - on, 0 - off): **00000000 000edcba** **a** - relay R1; **b** - relay R2; **c** - relay R3; **d** - relay R2; **e** - alarm LED; If written, only **a**, **b**, **c**, **d** bits are important (others are ignored) these bits allows user to control the relays via RS-485 interface
05h[1]	Yes	0h ÷ 1800h	State of active current output, expressed in 1/256 mA units – it means that high byte express integer part, and low byte fractional part of desired output current.

Register	Write	Range	Register description
	Yes	2CCh÷1800h	State of passive current output, expressed in 1/256 mA units – it means that high byte express integer part, and low byte fractional part of desired output current.
	Yes	0h ÷ 1600h	State of active voltage output, expressed in 1/512 V units – it means that high byte express integer part, and low byte fractional part of desired output voltage.
06h	No	-999 ÷ 9999	Peak (drop) value (no decimal point)
08h	No	0 ÷ 50	Temperature inside device housing expressed by 1°C
10h	Yes	0 ÷ 20	"**tyPE**" parameter in "**InPt**" menu (nominal input range): **0** - 0-20 mA range; **1** - 4-20 mA range; **2** - 0-10 V range; **3** - 2-10 V range; **4** - 0-5 V range; **5** - 1-5 V range; **6** - 0-60 mV range; **7** - 0-75 mV range; **8** - 0-100 mV range; **9** - 0-150 mV range; **10** - Pt-100; **11** - Pt-500; **12** - Pt-1000 **13** - thermocouple input K; **14** - thermocouple input S; **15** - thermocouple input J; **16** - thermocouple input T; **17** - thermocouple input N; **18** - thermocouple input R; **19** - thermocouple input B; **20** - thermocouple input E;
11h	Yes	0 ÷ 3	"**CHAr**" parameter in "**InPt**" menu (characteristic type) **0** - linear ; **1** - square; **2** - square root; **3** - user defined
12h	Yes	0 ÷ 255	"**FiLt**" parameter in "**InPt**" menu (time constant in seconds)
13h	Yes	0 ÷ 3	"**Pnt** "parameter in "**InPt**" menu (the copy of 03h register, decimal point position): **0** - " **0**"; **1** - " **0.0**"; **2** - " **0.00**"; **3** - "**0.000**"
14h	Yes	-999 ÷ 9999	"**Lo C**" parameter in "**InPt**" menu, no decimal point included
15h	Yes	-999 ÷ 9999	"**Hi C**" parameter in "**InPt**" menu, no decimal point included
16h	Yes	0 ÷ 999	"**Lo r**" parameter in "**InPt**" menu, in 0.1%
17h	Yes	0 ÷ 199	"**Hi r**" parameter in "**InPt**" menu, in 0.1%
18h	Yes	-99 ÷ 99	"**toFS**" parameter in "**InPt**" menu (shift of measurement scale), expressed by 0.1°C (for RTD input) or by 1.0°C (for TC input)
19h	Yes	0 ÷ 2	"**Conn**" parameter in "**InPt**" menu (RTD input connection method): **0** - "**4 in**"; **1** - "**3 in**"; **2** - "**2 in**"
20h[2]	Yes	0 ÷ 199	Device address
21h	No	20D8h	Device identification code (ID)
22h[3]	Yes	0 ÷ 7	**"bAud"** parameter in **"rS"** menu (baud rate); **0** - 1200 baud; **1** - 2400 baud; **2** - 4800 baud; **3** - 9600 baud; **4** - 19200 baud; **5** - 38400 baud; **6** - 57600 baud; **7** - 115200 baud
23h[4]	Yes	0 ÷ 1	**"mbAc"** parameter in **"rS"** menu (permission to write registers via RS-485 interface); **0** - write denied ; **1** - write allowed
24h	Yes	see descr.	Parameters of "**SECU**" menu (binary format (0 - „**oFF**", 1 - „**on**"): **bit 0** - "**A r1**" parameter; **bit 1** - "**A r2**" parameter **bit 2** - "**A r3**" parameter; **bit 3** - "**A r4**" parameter

Register	Write	Range	Register description
25h	Yes	0 ÷ 5	**"rESP"** parameter in **"rS"** menu (additional response delay); **0** - no additional delay; **1** - "**10c**" option; **2** - "**20c**" option; **3** - "**50c**" option; **4** - "**100c**" option; **5** - "**200c**" option;
27h	Yes	0 ÷ 99	**"mbtO"** parameter in **"rS"** menu (maximum delay between received frames); **0** - no delay checking; **1** ÷ **99** - maximum delay expressed in seconds
28h	Yes	0 ÷ 1	"**AL**" parameter in "**bEEP**" menu: **0** - off; **1** - on
29h	Yes	0 ÷ 1	"**R1**" parameter in "**bEEP**" menu: **0** - off; **1** - on
2Ah	Yes	0 ÷ 1	"**R2**" parameter in "**bEEP**" menu: **0** - off; **1** - on
2Bh	Yes	0 ÷ 1	"**R3**" parameter in "**bEEP**" menu: **0** - off; **1** - on
2Ch	Yes	0 ÷ 1	"**R4**" parameter in "**bEEP**" menu: **0** - off; **1** - on
2Dh	Yes	1 ÷ 8	"**bri**" parameter (display brightness); **1** - the lowest brightness; **8** - the highest brightness
2Fh	Yes	0 ÷ 1	"**Edit**" parameter (numerical parameters edit mode); **0** - „**dig**" mode; **1** - „**SLid**" mode
30h	Yes	-999 ÷ 9999	"**SEtP**" parameter in "**rEL1**" menu, no decimal point included
31h	Yes	-999 ÷ 999	"**HySt**" parameter in "**rEL1**" menu, no decimal point included
32h	Yes	0 ÷ 5	"**modE**" parameter in "**rEL1**" menu: **0** - "**noAC**" mode; **1** - "**on**" mode; **2** - "**oFF**" mode; **3** - "**in**" mode; **4** - "**out**" mode; **5** - "**modb**" mode
33h	Yes	0 ÷ 999	**"t on"** parameter in **"rEL1"** menu, expressed in tenth of seconds or tenth of minutes depend on **"unit"** parameter - register no. 35h)
34h	Yes	0 ÷ 999	**"toFF"** parameter in **"rEL1"** menu, expressed in tenth of seconds or tenth of minutes depend on **"unit"** parameter - register no. 35h)
35h	Yes	0 ÷ 1	**"unit"** parameter in **"rEL1"** menu: **0** - seconds; **1** - minutes
36h	Yes	0 ÷ 2	**"AL"** parameter in **"rEL1"** menu: **0** - no changes; **1** - on; **2** - off
37h	Yes	-999 ÷ 9999	"**SEt2**" parameter in "**rEL1**" menu, no decimal point included
38h	Yes	-999 ÷ 9999	"**SEtP**" parameter in "**rEL2**" menu, no decimal point included
39h	Yes	-999 ÷ 999	"**HySt**" parameter in "**rEL2**" menu, no decimal point included
3Ah	Yes	0 ÷ 5	"**modE**" parameter in "**rEL2**" menu: **0** - "**noAC**" mode; **1** - "**on**" mode; **2** - "**oFF**" mode; **3** - "**in**" mode; **4** - "**out**" mode; **5** - "**modb**" mode
3Bh	Yes	0 ÷ 999	**"t on"** parameter in **"rEL2"** menu, expressed in tenth of seconds or tenth of minutes depend on **"unit"** parameter - register no. 3Dh)
3Ch	Yes	0 ÷ 999	**"toFF"** parameter in **"rEL2"** menu, expressed in tenth of seconds or tenth of minutes depend on **"unit"** parameter - register no. 3Dh)
3Dh	Yes	0 ÷ 1	**"unit"** parameter in **"rEL2"** menu: **0** - seconds; **1** - minutes
3Eh	Yes	0 ÷ 2	**"AL"** parameter in **"rEL2"** menu: **0** - no changes; **1** - on; **2** - off

Register	Write	Range	Register description
3Fh	Yes	-999 ÷ 9999	"**SEt2**" parameter in "**rEL2**" menu, no decimal point included
40h	Yes	-999 ÷ 9999	"**SEtP**" parameter in "**rEL3**" menu, no decimal point included
41h	Yes	-999 ÷ 999	"**HySt**" parameter in "**rEL3**" menu, no decimal point included
42h	Yes	0 ÷ 5	"**modE**" parameter in "**rEL3**" menu: **0** - "**noAC**" mode; **1** - "**on**" mode; **2** - "**oFF**" mode; **3** - "**in**" mode; **4** - "**out**" mode; **5** - "**modb**" mode
43h	Yes	0 ÷ 999	**"t on"** parameter in **"rEL3"** menu, expressed in tenth of seconds or tenth of minutes depend on **"unit"** parameter - register no. 45h)
44h	Yes	0 ÷ 999	**"toFF"** parameter in **"rEL3"** menu, expressed in tenth of seconds or tenth of minutes depend on **"unit"** parameter - register no. 45h)
45h	Yes	0 ÷ 1	**"unit"** parameter in **"rEL3"** menu: **0** - seconds; **1** - minutes
46h	Yes	0 ÷ 2	**"AL"** parameter in **"rEL3"** menu: **0** - no changes; **1** - on; **2** - off
47h	Yes	-999 ÷ 9999	"**SEt2**" parameter in "**rEL3**" menu, no decimal point included
48h	Yes	-999 ÷ 9999	"**SEtP**" parameter in "**rEL4**" menu, no decimal point included
49h	Yes	-999 ÷ 999	"**HySt**" parameter in "**rEL4**" menu, no decimal point included
4Ah	Yes	0 ÷ 5	"**modE**" parameter in "**rEL4**" menu: **0** - "**noAC**" mode; **1** - "**on**" mode; **2** - "**oFF**" mode; **3** - "**in**" mode; **4** - "**out**" mode; **5** - "**modb**" mode
4Bh	Yes	0 ÷ 999	**"t on"** parameter in **"rEL4"** menu, expressed in tenth of seconds or tenth of minutes depend on **"unit"** parameter - register no. 4Dh)
4Ch	Yes	0 ÷ 999	**"toFF"** parameter in **"rEL4"** menu, expressed in tenth of seconds or tenth of minutes depend on **"unit"** parameter - register no. 4Dh)
4Dh	Yes	0 ÷ 1	**"unit"** parameter in **"rEL4"** menu: **0** - seconds; **1** - minutes
4Eh	Yes	0 ÷ 2	**"AL"** parameter in **"rEL4"** menu: **0** - no changes; **1** - on; **2** - off
4Fh	Yes	-999 ÷ 9999	"**SEt2**" parameter in "**rEL4**" menu, no decimal point included
50h	Yes	0 ÷ 1	"**modE**" parameter in "**HOLd**" menu (type of detected changes): **0** - peaks; **1** - drops
51h	Yes	0 ÷ 9999	"**PEA**" parameter in "**HOLd**" menu (minimum detectable change, no decimal point included)
52h	Yes	0 ÷ 199	"**timE**" parameter in "**HOLd**" menu, maximum peaks' (or drops') display time expressed in seconds
53h	Yes	0 ÷ 1	"**HdiS**" parameter in "**HOLd**" menu: **0** - "**rEAL**" mode ; **1** - "**HOLd**" mode
54h	Yes	0 ÷ 1	"**H r1**" parameter in "**HOLd**" menu : **0** - "**rEAL**" mode ; **1** - "**HOLd**" mode
55h	Yes	0 ÷ 1	"**H r2**" parameter in "**HOLd**" menu: **0** - "**rEAL**" mode ; **1** - "**HOLd**" mode

Register	*Write*	*Range*	*Register description*
56h	Yes	0 ÷ 1	"**H r3**" parameter in "**HOLd**" menu: **0** - "**rEAL**" mode ; **1** - "**HOLd**" mode
57h	Yes	0 ÷ 1	"**H r4**" parameter in "**HOLd**" menu: **0** - "**rEAL**" mode ; **1** - "**HOLd**" mode
58h	Yes	0 ÷ 1	"**HOUt**" parameter in "**HOLd**" menu: **0** - "**rEAL**" mode ; **1** - "**HOLd**" mode
70h[5]	Yes	-999 ÷ 1999	The value of „**X**" coordinate of point **no. 1** of the user defined characteristic, expressed in 0.1%
71h[5]	Yes	-999 ÷ 9999	The value of „**Y**" coordinate of point **no. 1** of the user defined characteristic, no decimal point included
72h[5] ÷ 95h[5]			Further pairs of „**X**" - „**Y**" coordinates of points **no. 2** ÷ **19** of the user defined characteristic
96h[5]	Yes	-999 ÷ 1999	The value of „**X**" coordinate of point **no. 20** of the user defined characteristic, expressed in 0.1%
97h[5]	Yes	-999 ÷ 9999	The value of „**Y**" coordinate of point **no. 20** of the user defined characteristic, no decimal point included
A0h[1]	Yes	0 ÷ 3	"**Omod**" parameter in "**OUtP**" menu (active current output mode) **0** - current output disabled; **1** - current output enabled with **4÷20mA** mode; **2** - current output enabled with **0÷20mA** mode; **3** - current output controlled via RS-485 interface
	Yes	0 ÷ 2	"**Omod**" parameter in "**OUtP**" menu (passive current output mode) **0** - current output disabled; **1** - current output enabled with **4÷20mA** mode; **2** - current output controlled via RS-485 interface
	Yes	0 ÷ 5	"**Omod**" parameter in "**OUtP**" menu (active voltege output mode) **0** - voltage output disabled; **1** - voltage output enabled with **0÷5V** mode; **2** - voltage output enabled with **1÷5V** mode; **3** - voltage output enabled with **0÷10V** mode; **4** - voltage output enabled with **2÷10V** mode; **5** - voltage output controlled via RS-485 interface
A1h[1]	Yes	-999 ÷ 9999	"**OUtL**" parameter in "**OUtP**" menu, no decimal point included
A2h[1]	Yes	-999 ÷ 9999	"**OUtH**" parameter in "**OUtP**" menu, no decimal point included
A3h[1]	Yes	0 ÷ 999	"**Lo r**" parameter in "**OUtP**" menu, for active current output and active voltage output, expressed in 0.1%
	Yes	0 ÷ 299	"**Lo r**" parameter in "**OUtP**" menu for passive current output, expressed in 0.1%
A4h[1]	Yes	0 ÷ 199	"**Hi r**" parameter in "**OUtP**" menu for active and passive current output, expressed in 0.1%
	Yes	0 ÷ 99	"**Hi r**" parameter in "**OUtP**" menu for active voltage output, expressed in 0.1%
A5h[1]	Yes	0 ÷ 3	"**AL**" parameter in "**OUtP**" menu (active current output value on critical exception): **0** - no change; **1** - 22.1 mA; **2** - 3.4 mA; **3** - 0 mA
	Yes	0 ÷ 2	"**AL**" parameter in "**OUtP**" menu (passive current output value on critical exception): **0** - no change; **1** - 22.1 mA; **2** - 3.4 mA

Register	Write	Range	Register description
	Yes	0 ÷ 5	"**AL**" parameter in "**OUtP**" menu (active voltage output value on critical exception): **0** - no change; **1** - 11 V; **2** - 5.5; **3** - 1.2 V; **4** - 0.6 V; **5** - 0 V

1 - these registers are active only if device is equipped with current or voltage output
2 - after writing to register no 20h the device responds with an "old" address in the message.
3 - after writing to register no 22h the device responds with the new baud rate.
4 - the value of the "**mbAc**" parameter is also connected to write to this register, so it is possible to block a writes, but impossible to unblock writes via RS-485 interface, The unblocking of the writes is possible from menu level only.
5 - the pairs of „**X** -**Y**" coordinates may be defined for any free point. The pair is "free" (it means that particular point is not defined) if „**X**" coordinate of this point is equal 8000h. After writing both X and Y coordinate the point is defined and used in calculation of result. The coordinates of any point can be changed at any time.

11.2. TRANSMISSION ERRORS DESCRIPTION

If an error occurs while write or read of single register, then the device sends an error code according to Modbus RTU specifications (example message no 1).

Error codes:
01h - illegal function (only functions 03h, 06h and 10h are available),
02h - illegal register address
03h - illegal data value
08h - no write permission (see: "**mbAc**" parameter)
A0h - exceed of upper border of input range
60h - exceed of lower border of input range
A0h and 60h codes can appear only during reg. 01h is reading by 03h function (read of a single register).

11.3. EXAMPLES OF QUERY/ANSWER FRAMES

Examples apply for device with address 1. All values are represent hexadecimal.

Field description:

ADDR	Device address on modbus network
FUNC	Function code
REG H,L	Starting address (address of first register to read/write, Hi and Lo byte)
COUNT H,L	No. of registers to read/write (Hi and Lo byte)
BYTE C	Data byte count in answer frame
DATA H,L	Data byte (Hi and Lo byte)
CRC L,H	CRC error check (Hi and Lo byte)

1. Read of the displayed value (measurement), SUR-94 device address = 01h:

ADDR	FUNC	REG H,L		COUNT H,L		CRC L,H	
01	03	00	01	00	01	D5	CA

a) The answer (we assume that the measure result is not out of range):

ADDR	FUNC	BYTE C	DATA H,L		CRC L,H	
01	03	02	00	FF	F8	04

DATA H, L - displayed value = 255, no decimal point.
Decimal point position can be read from reg. 03h.

b) The answer (if an error occur):

ADDR	FUNC	ERROR	CRC L,H	
01	83	60	41	18

ERROR - error code = 60h, bottom border of the measurement range is exceeded

2. Read of device ID code

ADDR	FUNC	REG H,L		COUNT H,L		CRC L,H	
01	03	00	21	00	01	D4	00

The answer:

ADDR	FUNC	BYTE C	DATA H,L		CRC L,H	
01	03	02	20	D8	A1	DE

DATA - identification code (20D8h)

3. Change of the device address from 1 to 2 (write to reg. 20h)

ADDR	FUNC	REG H,L		DATA H,L		CRC L,H	
01	06	00	20	00	02	09	C1

DATA H - 0
DATA L - new device address (2)

The answer (the same as the message):

ADDR	FUNC	REG H,L		DATA H,L		CRC L,H	
01	06	00	20	00	02	09	C1

4. Change of baud rate of all devices connected to the net (BROADCAST message).

ADDR	FUNC	REG H,L		COUNT H,L		CRC L,H	
00	06	00	22	00	04	29	D2

DATA H - 0
DATA L - 4, new baud rate 19200 baud

Device do not reply to BROADCAST-type messages.

5. Read of the registers 1, 2 and 3 in one message (example of reading a number of registries in one frame):

ADDR	FUNC	REG H,L		COUNT H,L		CRC L,H	
01	03	00	01	00	03	54	0B

COUNT L - the count of being read registers (max.16)

The answer:

ADDR	FUNC	BYTE C	DATA H1,L1		DATA H2,L2		DATA H3,L3		CRC L,H	
01	03	06	00	0A	00	00	00	01	78	B4

DATA H1, L1 - reg. 01h (10 - displayed value ”1.0”),
DATA H2, L2 - reg. 02h (0 - no errors),,
DATA H3, L3 - reg. 03h (1 - decimal point position ” 0.0”).

There is no full implementation of the Modbus Protocol in the device. The functions presented above are available only.

12. DEFAULT AND USER'S SETTINGS LIST

Parameter	*Description*	*Default value*	*User's value*	*Desc. page*
Parameters of relay R1 operation ("rEL1" menu)				
SEtP	Relay R1 threshold	20.0		28
SEt2	Relay R1 second threshold	40.0		28
HYSt	Hysteresis of relay R1	0.0		28
modE	Operation mode of relay R1	on		28
t on	Turn on delay of relay R1	0.0		29
toFF	Turn off delay of relay R1	0.0		29
unit	Unit of **"t on"**, **"toFF"** parameters of relay R1	SEC		29
AL	Reaction for critical situation of relay R1	oFF		29
Parameters of relay R2 operation ("rEL2" menu)				
SEtP	Relay R2 threshold	40.0		28
SEt2	Relay R2 second threshold	60.0		28
HYSt	Hysteresis of relay R2	0.0		28
modE	Operation mode of relay R2	on		28
t on	Turn on delay of relay R2	0.0		29
toFF	Turn off delay of relay R2	0.0		29
unit	Unit of **"t on"**, **"toFF"** parameters of relay R2	SEC		29
AL	Reaction for critical situation of relay R2	oFF		29
Parameters of relay R3 operation ("rEL3" menu)				
SEtP	Relay R3 threshold	60.0		28
SEt2	Relay R3 second threshold	80.0		28
HYSt	Hysteresis of relay R3	0.0		28
modE	Operation mode of relay R3	on		28
t on	Turn on delay of relay R3	0.0		29
toFF	Turn off delay of relay R3	0.0		29
unit	Unit of **"t on"**, **"toFF"** parameters of relay R3	SEC		29
AL	Reaction for critical situation of relay R3	oFF		29
Parameters of relay R4 operation ("rEL4" menu)				
SEtP	Relay R4 threshold	80.0		28
SEt2	Relay R4 second threshold	100.0		28
HYSt	Hysteresis of relay R4	0.0		28
modE	Operation mode of relay R4	on		28

Parameter	*Description*	*Default value*	*User's value*	*Desc. page*
t on	Turn on delay of relay R4	0.0		29
toFF	Turn off delay of relay R4	0.0		29
unit	Unit of **"t on"**, **"toFF"** parameters of relay R4	SEC		29
AL	Reaction for critical situation of relay R4	oFF		29
Activation of acoustic signal (menu "bEEP")				
AL	Activation of acoustic signal by critical situation	oFF		30
r1	Activation of acoustic signal by relay R1	oFF		30
r2	Activation of acoustic signal by relay R2	oFF		30
r3	Activation of acoustic signal by relay R3	oFF		30
r4	Activation of acoustic signal by relay R4	oFF		30
Configuration of measurement input ("inPt" menu)				
tYPE	Input mode	„4-20"		30
Conn	Connection method	„4-in"		31
FiLt	Filtering time constant (in seconds)	0		31
toFS	Shifting of measurement scale	0.0		31
CHAr	Conversion characteristic mode	Lin		31
Pnt	Decimal point position	0.0		31
Lo C	Minimum displayed value (for nominal range)	000.0		31
Hi C	Maximum displayed value (for nominal range)	100.0		31
Lo r	Extension of the bottom of the nominal input range	5.0 (%)		32
Hi r	Extension of the top of the nominal input range	5.0 (%)		32
Active current output configuration ("OUtP" menu)				
Omod	Active current output mode	„0-20" (mA)		33
OUtL	Display value for 0 mA or 4 mA current output	0.0		34
OUtH	Display value for 20 mA current output	100.0		34
Lo r	Extension of the bottom of the nominal output range	5.0 (%)		34
Hi r	Extension of the top of the nominal output range	5.0 (%)		34
AL	Current output value on critical exception	22.1 (mA)		35
Passive current output configuration ("OUtP" menu)				
Omod	Passive current output mode	„4-20" (mA)		33
OUtL	Display value for 4 mA current output	0.0		34
OUtH	Display value for 20 mA current output	100.0		34

Parameter	*Description*	*Default value*	*User's value*	*Desc. page*
Lo r	Extension of the bottom of the nominal output range	5.0 (%)		34
Hi r	Extension of the top of the nominal output range	5.0 (%)		34
AL	Current output value on critical exception	22.1 (mA)		35
Active voltage output configuration (“OUtP” menu)				
Omod	Active voltage output mode	„0-10” (V)		33
OUtL	Display value for 0 V, 1 V or 2 V voltage output	0.0		34
OUtH	Display value for 5 V or 10 V voltage output	100.0		34
Lo r	Extension of the bottom of the nominal output range	5.0 (%)		34
Hi r	Extension of the top of the nominal output range	5.0 (%)		34
AL	Voltage output value on critical exception	11.0 (V)		35
Display parameters				
bri	Display brightness	bri6		35
Configuration of peaks detection function (“HOLd” menu)				
modE	Kind of detected changes	norm		35
PEA	Minimum detected change	0.0		35
timE	Maximum time of peak displaying	0.0		35
HdiS	The type of displayed value	HOLd		36
H r1	Source of relay R1, and LED R1 control	rEAL		36
H r2	Source of relay R2, and LED R2 control	rEAL		36
H r3	Source of relay R3, and LED R3 control	rEAL		36
H r4	Source of relay R4, and LED R4 control	rEAL		36
HOUt	Source of current output control	rEAL		36
Settings of access to the configuration parameters (“SECu” menu)				
A r1	Permission to changes of relay R1 threshold without of the user password knowledge	on		36
A r2	Permission to changes of relay R2 threshold without of the user password knowledge	on		36
A r3	Permission to changes of relay R3 threshold without of the user password knowledge	on		36
A r4	Permission to changes of relay R4 threshold without of the user password knowledge	on		36
RS-485 interface configuration (menu “rS”)				
Addr	Device address	0		36
bAud	Baud rate	9.6		36

Parameter	*Description*	*Default value*	*User's value*	*Desc. page*
mbAc	Permission to changes of configuration registers	on		36
mbtO	Maximum delay between received messages	0		37
rESP	Additional delay of answer transmission	Std		37
Configuration of numerical parameters edition				
Edit	Numerical parameters edit mode	dig		37

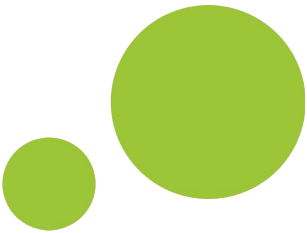

SIMEX Sp. z o.o.
ul. Wielopole 11
80-556 Gdańsk
Poland

tel.: (+48 58) 762-07-77
fax: (+48 58) 762-07-70

http://www.simex.pl
e-mail: info@simex.pl