# IIM201

## Inductive sensor

**IIKC022-ASKG/M/US-104**

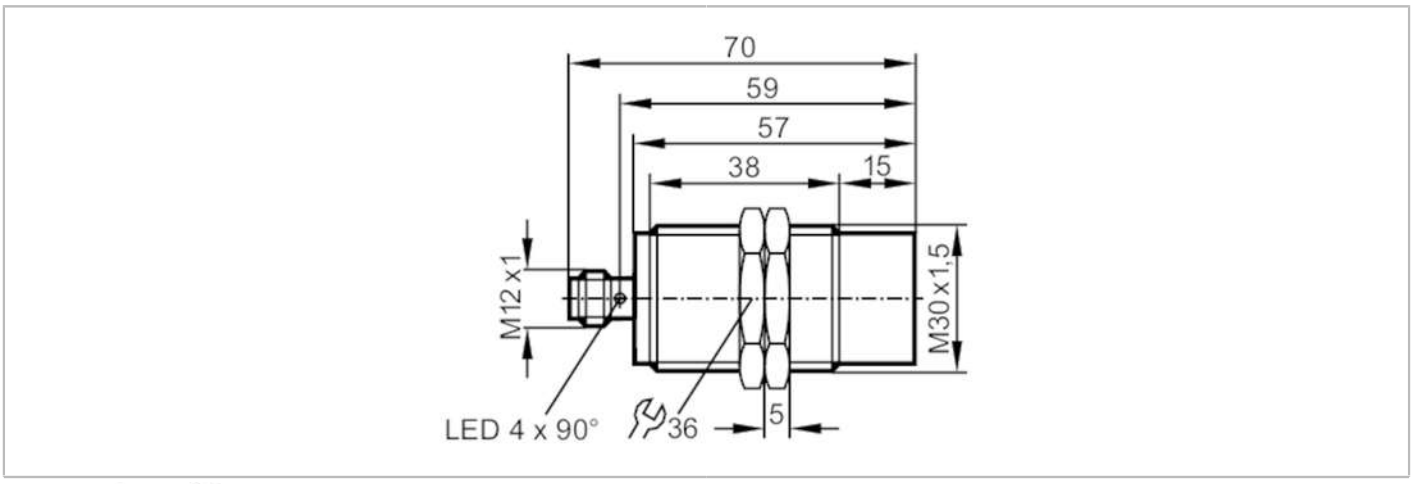


| | | |
|---|---|---|
| **Product characteristics** | | |
| Electrical design | | PNP/NPN |
| Output function | | normally open |
| Sensing range | [mm] | 22 |
| Housing | | threaded type |
| Dimensions | [mm] | M30 x 1.5 / L = 70 |
| **Application** | | |
| Special feature | | Gold-plated contacts; Increased sensing range |
| Application | | Use in mobile and harsh applications |
| **Electrical data** | | |
| Operating voltage | [V] | 10...36 DC |
| Current consumption | [mA] | < 10;  (only in 3-wire operation) |
| Protection class | | II |
| Reverse polarity protection | | yes |
| **Outputs** | | |
| Electrical design | | PNP/NPN |
| Output function | | normally open |
| Max. voltage drop switching output DC | [V] | 2.5 |
| Minimum load current | [mA] | 2;  (only in 2-wire operation) |
| Max. leakage current | [mA] | 0.5;  (only in 2-wire operation) |
| Permanent current rating of switching output DC | [mA] | 100 |
| Switching frequency DC | [Hz] | 100 |
| Short-circuit protection | | yes |
| Overload protection | | yes |
| **Detection zone** | | |
| Sensing range | [mm] | 22 |
| Real sensing range Sr | [mm] | 22 ± 10 % |
| Operating distance | [mm] | 0...17.82 |

# IIM201

## Inductive sensor

**IIKC022-ASKG/M/US-104**

| | | | |
|---|---|---|---|
| Increased sensing range | | yes | |
| **Accuracy / deviations** | | | |
| Correction factor | | steel: 1 / stainless steel: 0.7 / brass: 0.5 / aluminium: 0.45 / copper: 0.4 | |
| Hysteresis | [% of Sr] | 1...20 | |
| Switch point drift | [% of Sr] | -10...10 | |
| **Operating conditions** | | | |
| Ambient temperature | [°C] | -40...85 | |
| Protection | | IP 67; IP 69K | |
| **Tests / approvals** | | | |
| EMC | | automotive area | |
| | | noise emission and noise interference: ECE R10 | E1 type approval |
| | | noise immunity according to DIN ISO 11452-2 | 100 V/m |
| | | conducted interference in 24 V networks to ISO 7637-2: 2004 (pulse 1 to 4) and ISO16750-2: 2012 (load dump) | |
| | | pulse | 1 2a 2b 3a 3b 4 Load dump |
| | | severity level | III III III III III III Test A |
| | | failure criterion | C A C A A C C |
| | | EN 61000-4-2 ESD | 4 kV CD / 8 kV AD |
| | | EN 61000-4-3 HF radiated | 10 V/m |
| | | EN 61000-4-4 Burst | 2 kV |
| | | EN 61000-4-5 Surge | 0,5 kV mains line to line |
| | | EN 61000-4-6 HF conducted | 10 V |
| | | EN 55011 | class B |
| Vibration resistance | | EN 60068-2-6 Fc | 20 g (10...3000 Hz) / -20...50 °C |
| | | | 50 sweep cycles, 1 octave per minute, in 3 axes |
| Shock resistance | | EN 60068-2-27 Ea | 100 g 11 ms half-sine; 3 shocks each in every direction of the 3 coordinate axes / -40...85 °C |
| Continuous shock resistance | | EN 60068-2-27 | 40 g 6 ms; 4000 shocks each in every direction of the 3 coordinate axes / -20...50 °C |
| Fast temperature change | | EN 60068-2-14 Na | TA = -40 °C; TB = 85 °C; t1 = 30 min; t2 = < 10 s; 50 cycles |
| Salt spray test | | EN 60068-2-52 Kb | severity level 5 (4 test cycles) |
| MTTF | [years] | 1089 | |
| UL approval | | Ta | 0...40 °C |
| | | Enclosure type | Type 1 |
| | | power supply | Limited Voltage/Current |
| | | File number UL | E174191 |
| **Mechanical data** | | | |
| Weight | [g] | 118.3 | |
| Housing | | threaded type | |
| Mounting | | non-flush mountable | |
| Dimensions | [mm] | M30 x 1.5 / L = 70 | |
| Thread designation | | M30 x 1.5 | |

# IIM201

## Inductive sensor

**IIKC022-ASKG/M/US-104**

| | | | |
|---|---|---|---|
| Materials | | | threaded sleeve: stainless steel; sensing face: LCP natural; LED window: PEI; lock nuts: brass |
| Tightening torque | [Nm] | | 50 |
| **Displays / operating elements** | | | |
| Display | | switching status | 4 x 90° LED, yellow |
| **Accessories** | | | |
| Items supplied | | | lock nuts: 2 |
| **Remarks** | | | |
| Pack quantity | | | 1 pcs. |
| **Electrical connection - plug** | | | |

Connector: 1 x M12; coding: A; Contacts: gold-plated




