IFW204

Inductive sensor

IFK3004UBPKG/K1/SC/US-104

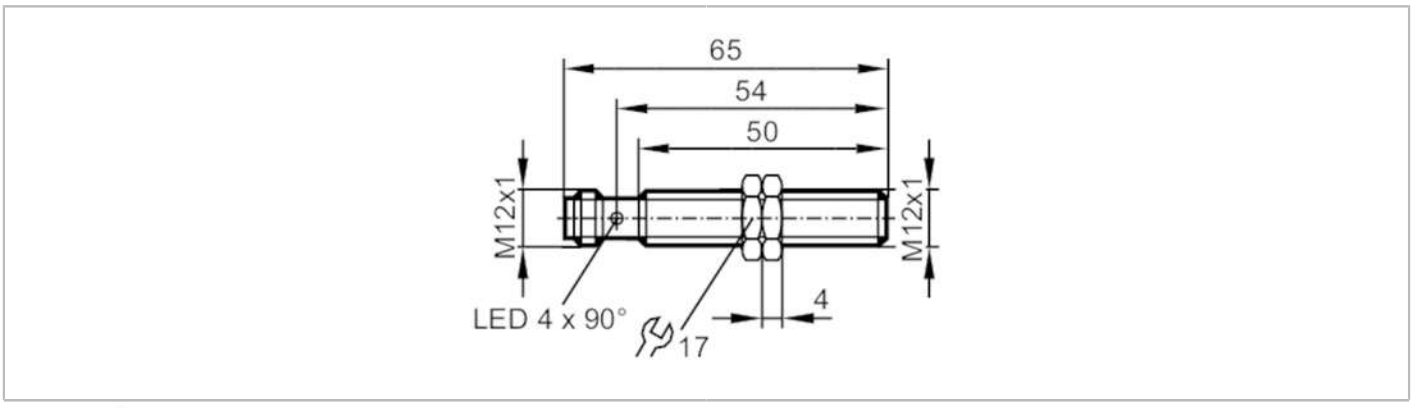

Product characteristics		
Electrical design		PNP
Output function		normally open
Sensing range	[mm]	4
Housing		threaded type
Dimensions	[mm]	M12 x 1 / L = 65
Application		
Special feature		Gold-plated contacts; Increased sensing range; Correction factor K = 1; Magnetic-field immune; anti-spatter
Application		Use in welding applications
Magnetic-field immune		yes
Max. magnetic field immunity	[mT]	300
Electrical data		
Operating voltage	[V]	10...30 DC
Current consumption	[mA]	< 20
Protection class		II
Reverse polarity protection		yes
Outputs		
Electrical design		PNP
Output function		normally open
Max. voltage drop switching output DC	[V]	2.5
Permanent current rating of switching output DC	[mA]	100
Switching frequency DC	[Hz]	2000
Short-circuit protection		yes
Overload protection		yes
Detection zone		
Sensing range	[mm]	4
Real sensing range Sr	[mm]	4 ± 10 %
Operating distance	[mm]	0...3.24
Increased sensing range		yes

IFW204

Inductive sensor

IFK3004UBPKG/K1/SC/US-104

Accuracy / deviations			
Correction factor		steel: 1 / stainless steel: 1 / brass: 1 / aluminium: 1 / copper: 1	
Hysteresis	[% of Sr]	3...15	
Switch point drift	[% of Sr]	-10...10	
Correction factor K = 1		yes	
Operating conditions			
Ambient temperature	[°C]	-40...85	
Protection		IP 65; IP 66; IP 67; IP 68; IP 69K	
Tests / approvals			
EMC		EN 61000-4-2 ESD	4 kV CD / 8 kV AD
		EN 61000-4-3 HF radiated	10 V/m
		EN 61000-4-4 Burst	2 kV
		EN 61000-4-6 HF conducted	10 V
		EN 55011 emission	class B
MTTF	[years]	466	
Embedded software included		yes	
UL approval		Ta	-25...70 °C
		Enclosure type	Type 1
		power supply	Limited Voltage/Current
		UL Approval no.	A005
		File number UL	E174191
Mechanical data			
Weight	[g]	29.3	
Housing		threaded type	
Mounting		flush mountable	
Dimensions	[mm]	M12 x 1 / L = 65	
Thread designation		M12 x 1	
Materials		brass anti-spatter; sensing face: LCP black; LED window: PEI; lock nuts: brass anti-spatter	
Displays / operating elements			
Display		switching status	4 x LED, yellow
Accessories			
Items supplied		lock nuts: 2	
Remarks			
Pack quantity		1 pcs.	

Electrical connection - plug

Connector: 1 x M12; coding: A; Contacts: gold-plated

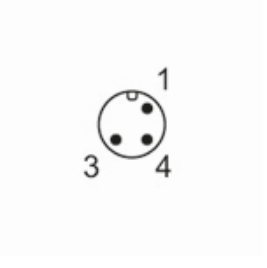

IFW204

Inductive sensor

IFK3004UBPKG/K1/SC/US-104

Connection

