IF6014

Inductive sensor

IFB35,5-BPKG/2M/PVC/OLED

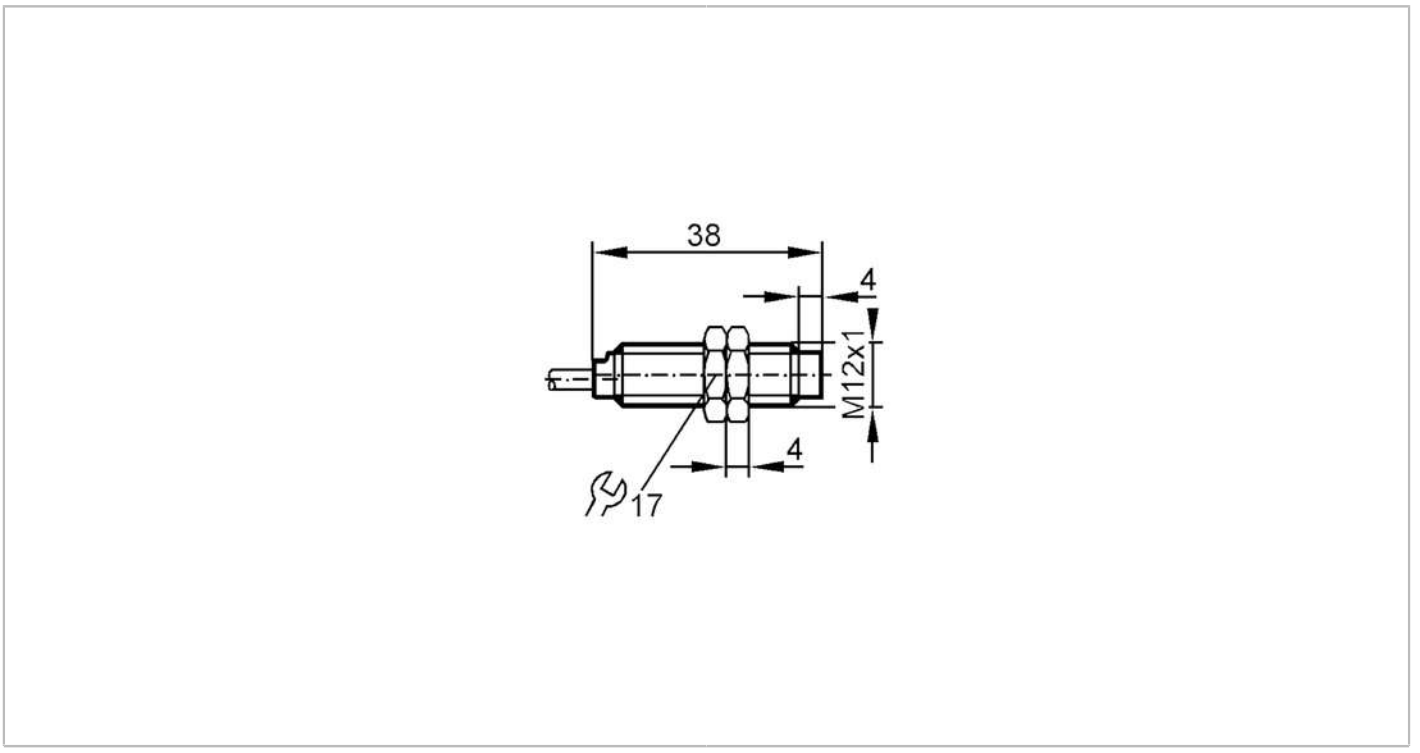

Product characteristics		
Electrical design		PNP
Output function		normally open
Sensing range	[mm]	5.5
Housing		threaded type
Dimensions	[mm]	M12 x 1
Electrical data		
Operating voltage	[V]	10...36 DC
Current consumption	[mA]	15; (24 V)
Protection class		III
Reverse polarity protection		yes
Outputs		
Electrical design		PNP
Output function		normally open
Max. voltage drop switching output DC	[V]	2.5
Permanent current rating of switching output DC	[mA]	150
Switching frequency DC	[Hz]	800
Short-circuit protection		yes
Type of short-circuit protection		pulsed
Overload protection		yes

IF6014

Inductive sensor

IFB35,5-BPKG/2M/PVC/OLED

Detection zone		
Sensing range	[mm]	5.5
Real sensing range Sr	[mm]	5.5 ± 10 %
Operating distance	[mm]	0...4.45
Accuracy / deviations		
Correction factor		steel: 1 / stainless steel: 0.7 / brass: 0.5 / aluminium: 0.4 / copper: 0.3
Hysteresis	[% of Sr]	1...15
Switch point drift	[% of Sr]	-10...10
Operating conditions		
Ambient temperature	[°C]	10...50
Protection		IP 67
Tests / approvals		
EMC		EN 60947-5-2
		EN 55011 class B
MTTF	[years]	2531
Mechanical data		
Weight	[g]	57.1
Housing		threaded type
Mounting		non-flush mountable
Dimensions	[mm]	M12 x 1
Thread designation		M12 x 1
Materials		brass white bronze coated; PBT
Accessories		
Items supplied		lock nuts: 2
Remarks		
Pack quantity		1 pcs.
Electrical connection		

Cable: 2 m, PVC; 3 x 0.14 mm²

Connection

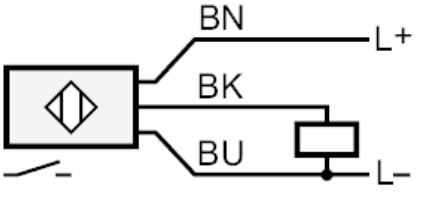

	Core colours
BN	brown
BK	black
BU	blue