Pegler Terrier

Lockshield radiator valve angle pattern for copper or iron

97 CPLS Angle pattern



97 CPLS Angle pattern

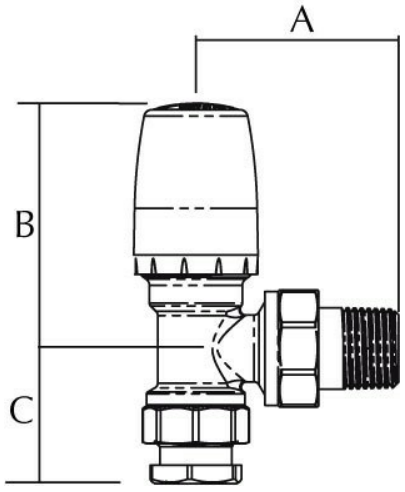

General Information

Size	Pattern No.	Pack 1 Qty	Pack 2 Qty	Code	Barcode	Price (£) each ex VAT
15mm / 1/2" x 1/2"	97 CPLS	1	10	680008	5022050546739	£36.99
22mm / 3/4" x 3/4"	97 CPLS	1	5	680011	5022050546760	£46.83
15mm / 1/2" x 1/2"	97 CPLS IC	1	10	680019	5022050547774	POA

Dimensions

Code	Description	A	B	C
680008	1/2-15MM 97LS CP BELMONT ANGLE RAD VALVE	53	63	35
680011	3/4-22MM 97LS CP BELMONT ANGLE RAD VALVE	61	64	41
680019				

Pegler Yorkshire reserve the right to change specifications

Guarantee

Thermostatic and Manual Radiator Valves

Pegler Customcare 5 Year Guarantee - Terms & Conditions

Products are subject to a 5 year guarantee that is between Pegler and the final purchaser of the product.

The guarantee is subject to proof of purchase being supplied.

This guarantee does not affect any statutory rights the consumer may have in law.

The guarantee covers manufacturing or material defects and is not applicable where the product is fitted contrary to conditions of use in our literature.

The guarantee is subject to the following limitations:

1. The valves are designed for use only in an indirect open-vented or sealed water-filled central heating and/or indirect hot water system and for no other purpose.

2. They must be used within the pressure and temperature limits stated in the technical information table below.

Operating Conditions (Maximum)
System Water Temperature (at 5bar) : 120 °C
Operating pressure (at 65 oC) :10 bar

3. Under no circumstances must they be used to in systems containing liquids or solutions other than water. The only exception is the addition of a proprietary central heating corrosion inhibitor, cleaner or anti-freeze to the system water in accordance with the manufacturer's instructions.

4. Damage caused by abusive behaviour and accidental damage to the product are not covered by this guarantee

The extent of Pegler liability is limited to the cost of the replacement of the defective item and not to fitting or

consequential damages.

Pressure and Temperature

Description	Minimum Operating Pressure (bar)	Maximum Cold Working Pressure (bar)	Maximum Hot Working Pressure (bar)
97 CPLS Angle Pattern	No Minimum Operating Pressure	10.0 bar at temperatures up to 120oC	Not Suitable for Maximum Hot Working Pressure

Care and Maintenance

Care
No regular aesthetic care is required for this product

Maintenance
No regular maintenance is required for this product.

For any further help please contact the Service Support Team on: 0800 1560050.

Regulations

Regulations

Terrier manual radiator valves are generally designed to BS2767-10.

For valves with compression connections, the connections are designed to BS EN1254-2; threaded connections comply with BS 21 or BS 2779.

They are designed for use only in an indirect open-vented or sealed water-filled central heating and/or indirect hot water system and for no other purpose.

They must be used within the pressure and temperature limits stated in the technical information table below.

Operating Conditions	Maximum
System Water Temperature (at 5bar)	120°C
Operating pressure (at 65°C)	10 bar

Under no circumstances must they be used in systems containing liquids or solutions other than water. The only exception is the addition of a proprietary central heating corrosion inhibitor, cleaner or anti-freeze to the system water in accordance with the manufacturer's instructions.

Terrier heating controls are manufactured to a strict quality assurance system in accordance with ISO 9000: 2001

Materials

Component	Material
Body	Forged Brass (LS) Forged Brass Chrome Plated (CPLS)
Head	Brass Bar
Spindle/Valve	Brass Bar
Glandnut/Gland	Brass Bar
Adapter	Forged Brass (LS) Forged Brass Chrome Plated (CPLS)
Capnut	Forged Brass (LS) Forged Brass Chrome Plated (CPLS)
Cone	Brass
Set Screw	Brass
Lockshield	Polypropylene

97 CPLS Angle pattern

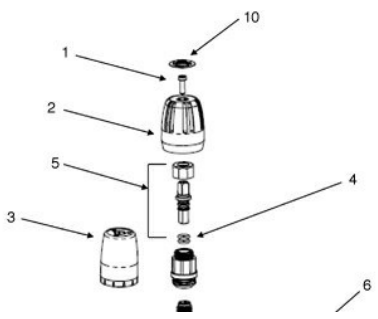

Spare Key	Description	Code	Barcode	Date From	Date To	Price (£) ex VAT
			1			
1	S20 SCREW (B4)	854435	5013866082474	01/01/2008	To Current	£0.00
1	S4CP CHROME SCREW	840109	5013866058882	01/04/1994	31/12/2007	£1.42
1	S20 SCREW (B4)	854435	5013866082474	01/01/2008	To Current	£0.00
1	S4CP CHROME SCREW	840109	5013866058882	01/04/1994	31/12/2007	£1.42
1	S4 BRASS SCREW	840110	5013866058899	01/01/1900	To Current	£1.23
1	S4CP CHROME SCREW	840109	5013866058882	01/01/1900	To Current	£1.42
1	S20 SCREW (B4)	854435	5013866082474	01/01/2008	To Current	£0.00

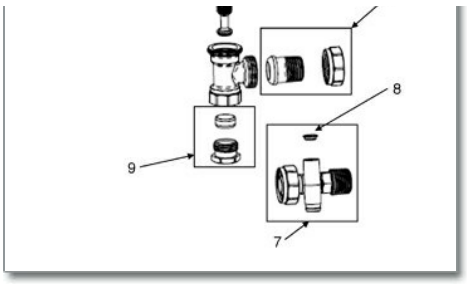

Spare Key	Description	Code	Barcode	Date From	Date To	Price (£) ex VAT
1	S4CP CHROME SCREW	840109	5013866058882	01/04/1994	31/12/2007	£1.42

Spare Key	Description	Code	Barcode	Date From	Date To	Price (£) ex VAT
2						
2	WH9 WHEELHANDLE	843001	5013866034022	01/04/1994	31/12/2007	£6.30
2	WH17 WHEELHANDLE (B4)	854436	5013866082481	01/01/2008	To Current	£5.78
2	WH17 WHEELHANDLE (B4)	854436	5013866082481	01/01/2008	To Current	£5.78
2	WH9 WHEELHANDLE	843001	5013866034022	01/04/1994	31/12/2007	£6.30
2	WH10 WHEELHANDLE	843003	5013866059131	01/01/1900	To Current	£6.30
2	WH10 WHEELHANDLE	843003	5013866059131	01/01/1900	To Current	£6.30
2	WH9 WHEELHANDLE	843001	5013866034022	01/04/1994	31/12/2007	£6.30
2	WH17 WHEELHANDLE (B4)	854436	5013866082481	01/01/2008	To Current	£5.78

Spare Key	Description	Code	Barcode	Date From	Date To	Price (£) ex VAT
3						
3	LS22 LOCKSHIELD	843002	5013866034039	01/04/1994	31/12/2007	£6.30
3	LS34 LOCKSHIELD (B4)	854437	5013866082498	01/01/2008	To Current	£5.78
3	LS34 LOCKSHIELD (B4)	854437	5013866082498	01/01/2008	To Current	£5.78
3	LS22 LOCKSHIELD	843002	5013866034039	01/04/1994	31/12/2007	£6.30
3	LS23 LOCKSHIELD	843004	5013866059148	01/01/1900	10/08/2012	£0.00
3	LS23 LOCKSHIELD	843004	5013866059148	01/01/1900	10/08/2012	£0.00
3	LS22 LOCKSHIELD	843002	5013866034039	01/04/1994	31/12/2007	£6.30
3	LS34 LOCKSHIELD (B4)	854437	5013866082498	01/01/2008	To Current	£5.78

Spare Key	Description	Code	Barcode	Date From	Date To	Price (£) ex VAT
4						
4	OR3 O RING (RED) DISCONTINUED	840002	5013866033940	01/04/1994	31/12/2007	£0.00
4	OR34 O RING (B4)	854438	5013866082504	01/01/2008	To Current	£3.22
4	OR3 O RING (RED) DISCONTINUED	840002	5013866033940	01/04/1994	31/12/2007	£0.00
4	OR34 O RING (B4)	854438	5013866082504	01/01/2008	To Current	£3.22
4	OR3 O RING (RED) DISCONTINUED	840002	5013866033940	01/01/1900	To Current	£0.00
4	OR3 O RING (RED) DISCONTINUED	840002	5013866033940	01/01/1900	To Current	£0.00
4	OR34 O RING (B4)	854438	5013866082504	01/01/2008	To Current	£3.22
4	OR3 O RING (RED) DISCONTINUED	840002	5013866033940	01/04/1994	31/12/2007	£0.00

Spare Key	Description	Code	Barcode	Date From	Date To	Price (£) ex VAT
5						
5	SOR4 SPINDLE & O RING SET - DISCONTINUED	840113	5013866058929	01/04/1994	20/02/2013	£0.00
5	SOR7 SPINDLE & O RING SET (B4)	854439	5013866082511	01/01/2008	To Current	£10.12
5	SOR7 SPINDLE & O RING SET (B4)	854439	5013866082511	01/01/2008	To Current	£10.12
5	SOR4 SPINDLE & O RING SET - DISCONTINUED	840113	5013866058929	01/04/1994	20/02/2013	£0.00
5	SOR5 SPINDLE & O RING SET - DISCONTINUED	840114	5013866058936	01/01/1900	To Current	£0.00
5	SOR5 SPINDLE & O RING SET - DISCONTINUED	840114	5013866058936	01/01/1900	To Current	£0.00
5	SOR4 SPINDLE & O RING SET - DISCONTINUED	840113	5013866058929	01/04/1994	20/02/2013	£0.00
5	SOR7 SPINDLE & O RING SET (B4)	854439	5013866082511	01/01/2008	To Current	£10.12

Spare Key	Description	Code	Barcode	Date From	Date To	Price (£) ex VAT
6						
6	TP3CP CHROME TAIL PIPE DISCONTINUED	843008	5013866059186	01/04/1994	31/12/2007	£0.00
6	TP12CP 1/2 CHROME TAIL PIPE (B4)	854430	5013866082429	01/01/2008	To Current	£16.25
6	TP4CP CHROME TAIL PIPE	843009	5013866059193	01/04/1994	31/12/2007	£0.00

Spare Key	Description	Code	Barcode	Date From	Date To	Price (£) ex VAT
6	TP13CP 3/4 CHROME TAIL PIPE (B4)	854431	5013866082436	01/01/2008	To Current	£0.00
6	TP5 BRASS TAIL PIPE	843007	5013866059179	01/01/1900	To Current	£0.00
6	TP5CP CHROME TAIL PIPE	843010	5013866059209	01/01/1900	To Current	£0.00
6	TP12CP 1/2 CHROME TAIL PIPE (B4)	854430	5013866082429	01/01/2008	To Current	£16.25
6	TP3CP CHROME TAIL PIPE DISCONTINUED	843008	5013866059186	01/04/1994	31/12/2007	£0.00

Spare Key	Description	Code	Barcode	Date From	Date To	Price (£) ex VAT
7						
7	TP14 DO TAIL PIPE (B4)	854440	5013866082528	01/01/1900	To Current	£0.00
7	TP7CP CHROME TAIL PIPE	840119	5013866058967	01/01/1900	To Current	£0.00
7	TP14 DO TAIL PIPE (B4)	854440	5013866082528	01/01/1900	To Current	£0.00

Spare Key	Description	Code	Barcode	Date From	Date To	Price (£) ex VAT
9						
9	NC1CP NIPPLE & CONE (CHROME)	843013	5013866059230	01/04/1994	31/12/2007	£5.25
9	NC5 1/2 NIPPLE & CONE (B4)	854432	5013866082443	01/01/2008	To Current	£4.79
9	NC6 3/4 NIPPLE & CONE (B4)	854433	5013866082450	01/01/1900	To Current	£4.79
9	NC2CP NIPPLE & CONE (CHROME)	843014	5013866059247	01/01/1900	To Current	£0.00
9	22MM BSC103 BELMONT SHORT CONE	843016	5013866059261	01/04/1994	To Current	£1.84
9	NC5 1/2 NIPPLE & CONE (B4)	854432	5013866082443	01/01/2008	To Current	£4.79
9	NC1CP NIPPLE & CONE (CHROME)	843013	5013866059230	01/04/1994	31/12/2007	£5.25

Spare Key	Description	Code	Barcode	Date From	Date To	Price (£) ex VAT
10						
10	IN17 INDICE (BRAND PLATE B4)	854441	5013866082535	01/01/1900	To Current	£0.00
10	IN17 INDICE (BRAND PLATE B4)	854441	5013866082535	01/01/1900	To Current	£0.00
10	IN17 INDICE (BRAND PLATE B4)	854441	5013866082535	01/01/1900	To Current	£0.00

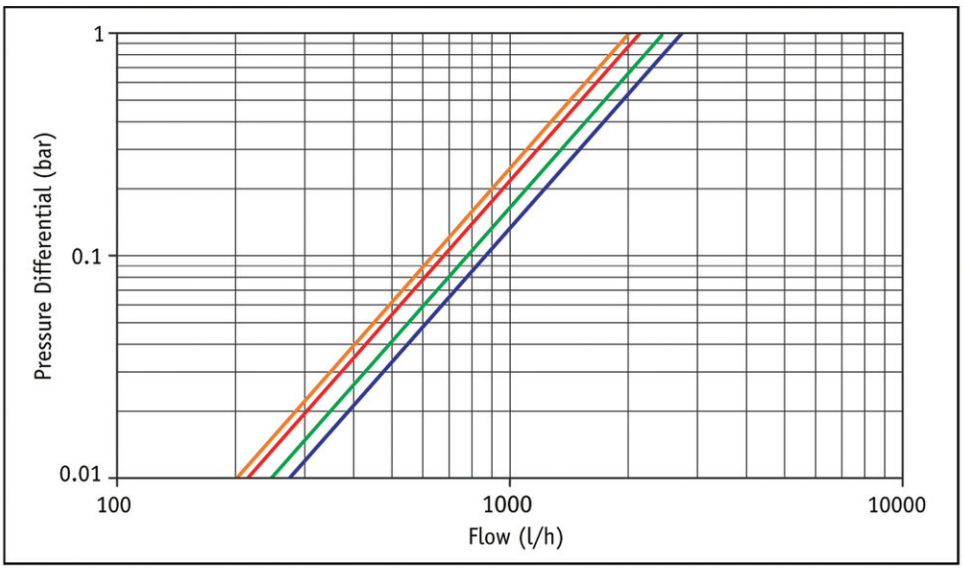

	Pressure (bar)	Flow (l/h)	kv
Straight pattern forward flow	0.01 1	214.8 2148.0	2.15
Straight pattern reverse flow	0.01 1	203.9 2039.1	2.04
Angle pattern forward flow	0.01 1	276.4 2764.0	2.76
Angle pattern reverse flow	0.01 1	258.4 2584.3	2.58

Kitemark™ Certificate

By Royal Charter

This is to certify that:

Pegler Yorkshire Group Limited
Belmont Works
St Catherine's Avenue
Doncaster
South Yorkshire
DN4 8DF
United Kingdom

Holds Certificate Number: KM 07441

In respect of:

BS 2767
Manually operated copper alloy valves for radiators

This issues the right and licence to use the Kitemark in accordance with the Kitemark Terms and Conditions governing the use of the Kitemark, as may be updated from time to time by BSI Assurance UK Ltd (the "Conditions"). All defined terms in this Certificate shall have the same meaning as in the Conditions.

The use of the Kitemark is authorized in respect of the Product(s) detailed on this Certificate provided at or from the above address.

For and on behalf of BSI:

Chris Lewis - Certification Director, Product Certification

First Issued: 1986-01-09
Latest Issue: 2019-02-12

Effective Date: 2019-02-12
Expiry Date: 2022-02-11

...making excellence a habit.™

This certificate has been issued by and remains the property of BSI Assurance UK Ltd, Kitemark Court, Davy Avenue, Knowlhill, Milton Keynes MK5 8PP, United Kingdom and should be returned immediately upon request.
To check its validity telephone +44 (0) 345 080 9000. An electronic certificate can be authenticated online.

BSI Assurance UK Limited, registered in England under number 7805321 at 389 Chiswick High Road, London W4 4AL, UK.
A member of BSI Group of Companies.

Kitemark™ Certificate

No. KM 07441

BS 2767 – Manually operated copper alloy valves for radiators

All dimensions are in millimetres except dimensions followed by (") which are inches

Figure No.	Description	Size
367 WH	Angle Pattern Radiator valve	8, 10, 15
367 LS	Angle Pattern Radiator valve	8, 10, 15
367 DLS	Angle Pattern Radiator valve	8, 10, 15
368 WH	Straight Pattern Radiator valve	15
368 LS	Straight Pattern Radiator valve	15
369 WH	Angle Pattern Radiator valve	½" Iron
369 LS	Angle Pattern Radiator valve	½" Iron
97 WH	Angle Pattern Radiator valve	15, ½", ¾" Iron
97 LS	Angle Pattern Radiator valve	15, ½", ¾" Iron
97 DLS	Angle Pattern Radiator valve	15, ½", ¾" Iron
97 WH	Angle Pattern Radiator valve	1" Iron
97 LS	Angle Pattern Radiator valve	1" Iron
98 WH	Straight Pattern Radiator valve	15, ½", ¾" Iron
98 LS	Straight Pattern Radiator valve	15, ½", ¾" Iron
98 DLS	Straight Pattern Radiator valve	15, ½", ¾" Iron
98 WH	Straight Pattern Radiator valve	1" Iron
98 LS	Straight Pattern Radiator valve	1" Iron

First Issued: 1986-01-09
Latest Issue: 2019-02-12

Effective Date: 2019-02-12
Expiry Date: 2022-02-11

This certificate has been issued by and remains the property of BSI Assurance UK Ltd, Kitemark Court, Davy Avenue, Knowlhill, Milton Keynes MK5 8PP, United Kingdom and should be returned immediately upon request.
To check its validity telephone +44 (0) 345 080 9000. An electronic certificate can be authenticated online.

BSI Assurance UK Limited, registered in England under number 7805321 at 389 Chiswick High Road, London W4 4AL, UK.
A member of BSI Group of Companies.

Kitemark™ Certificate

No. KM 07441

Figure No.	Description	Size
2063 WH	Angle Pattern Radiator valve	½", ¾", 1" Iron
2063 LS	Angle Pattern Radiator valve	½", ¾", 1" Iron
2076 WH	Gate Valve Female Iron x Union Pipe	½", ¾", 1" Iron
2076 LS	Gate Valve Female Iron x Union Pipe	½", ¾", 1" Iron

The valves listed are manufactured in either matt brass or polished chrome plate finish.

Radiator valves listed above are marketed under the brand names:
Pegler, Belmont, Terrier

The following valves are marketed by:

Hattersley Newman Hender Limited
Burscough Road
Ormskirk
Lancashire
L39 2XG

Figure No.	Description	Size
2380 CP	Angle Pattern Radiator valve	15, ½", ¾", 1" Iron
2380 CP LS	Angle Pattern Radiator valve	15, ½", ¾", 1" Iron
2406 CP	Straight Pattern Radiator Valve	15, ½", ¾", 1" Iron
2406 CP LS	Straight Pattern Radiator Valve	15, ½", ¾", 1" Iron

The above valves are finished in 'Matt Chrome Plate'

First Issued: 1986-01-09
Latest Issue: 2019-02-12

Effective Date: 2019-02-12
Expiry Date: 2022-02-11

This certificate has been issued by and remains the property of BSI Assurance UK Ltd, Kitemark Court, Davy Avenue, Knowlhill, Milton Keynes MK5 8PP, United Kingdom and should be returned immediately upon request.
To check its validity telephone +44 (0) 345 080 9000. An electronic certificate can be authenticated online.

BSI Assurance UK Limited, registered in England under number 7805321 at 389 Chiswick High Road, London W4 4AL, UK.
A member of BSI Group of Companies.

Kitemark™ Certificate

No. KM 07441

Figure No.	Description	Size
2386 CP	Angle Pattern Radiator valve	15, ½", ¾", 1" Iron
2386 CP LS	Angle Pattern Radiator valve	15, ½", ¾", 1" Iron
2407 CP	Straight Pattern Radiator Valve	15, ½", ¾", 1" Iron
2407 CP LS	Straight Pattern Radiator Valve	15, ½", ¾", 1" Iron

The above valves are finished in 'Polished chrome plate'

Radiator valves listed above are marketed under the brand name 'Delflo'

First Issued: 1986-01-09
Latest Issue: 2019-02-12

Effective Date: 2019-02-12
Expiry Date: 2022-02-11

This certificate has been issued by and remains the property of BSI Assurance UK Ltd, Kitemark Court, Davy Avenue, Knowlhill, Milton Keynes MK5 8PP, United Kingdom and should be returned immediately upon request.
To check its validity telephone +44 (0) 345 080 9000. An electronic certificate can be authenticated online.

BSI Assurance UK Limited, registered in England under number 7805321 at 389 Chiswick High Road, London W4 4AL, UK.
A member of BSI Group of Companies.