Part Number: BU-00201-*/ BU-00202-*/ BU-00203-*

Description: Plunger Clip

2907

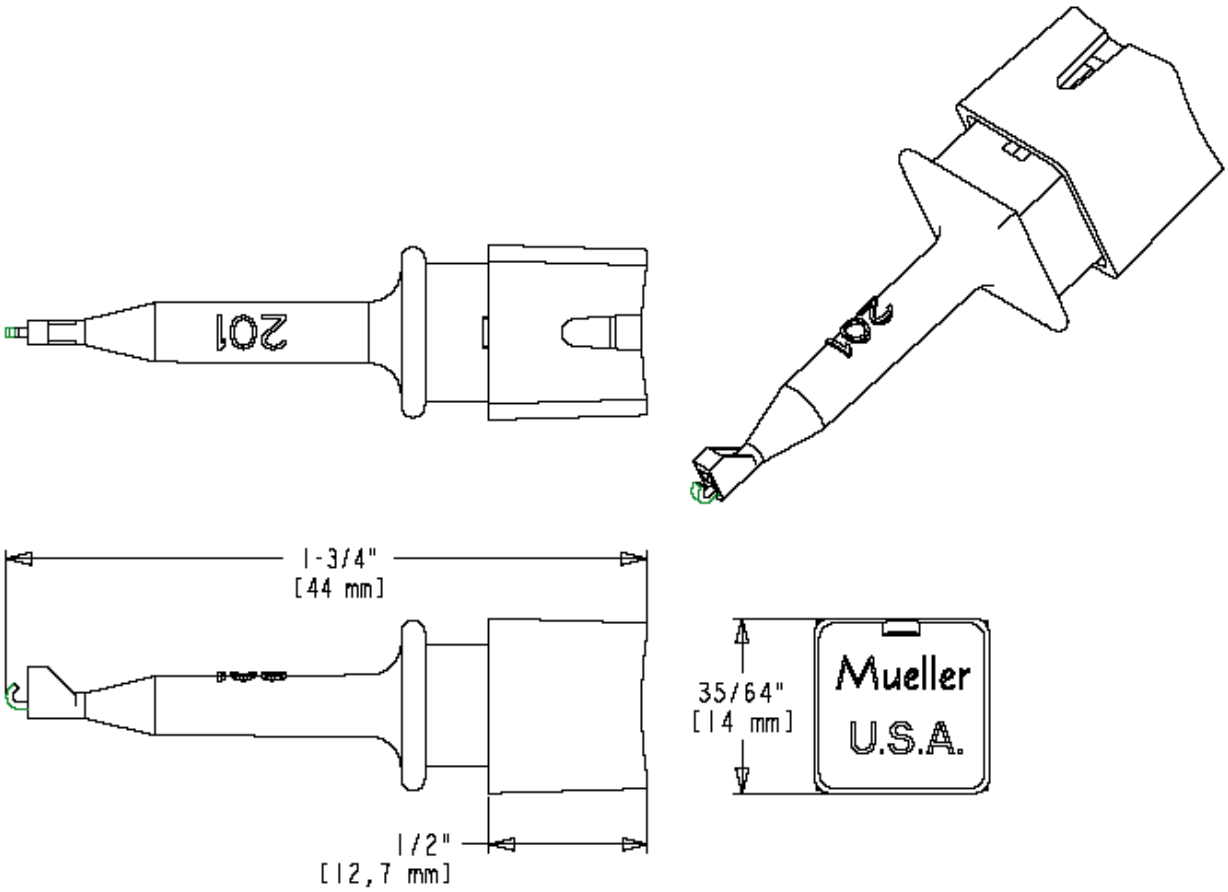

- **Plunger clip**
- **Material: Cap & Body: glass filled nylon; Spring: Stainless steel; Contact: beryllium copper; insulator to a single contact point**
- **Length: 1.75” (44 mm)(BU-00201-*); 2.50” (63 mm)(BU-00202-*); 3.50” (88 mm)(BU-00203-*);**
- ***Std Colors: -0 Black -2 Red**
- **Rating: 1000 Volts, 10 Amps**

Mueller Electric Company
1625 E. 31st Street
Cleveland, Ohio 44114

ISO 9001:2000
Over 95 Years Of Innovation
www.muellerelectric.com

TEL. 800-955-2629
TEL. 216-771-5225
FAX. 216-771-3068