# OY413S

## Safety light grid

OYA0910-04-2-09-P-1-A

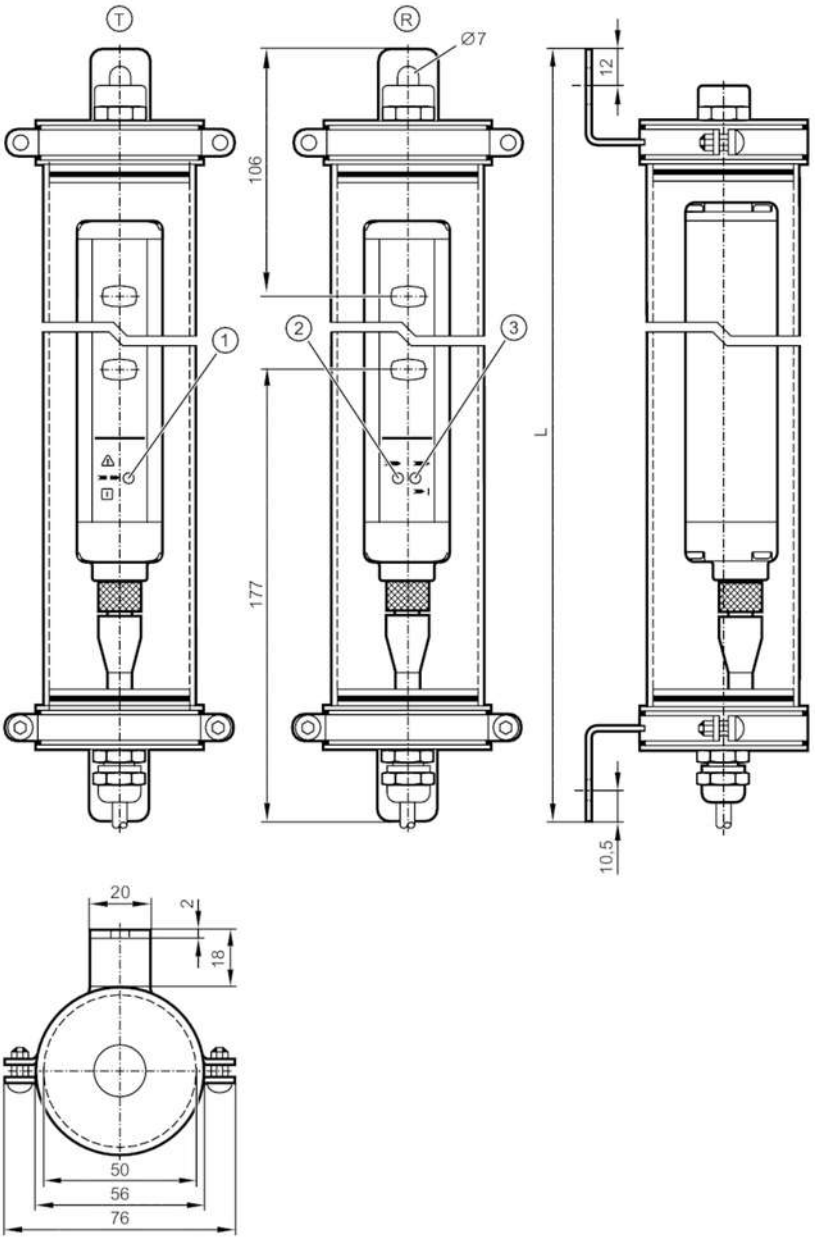


T transmitter
R receiver
1 LED three-colour red / green / orange
2 LED 2-colour yellow/blue
3 LED 2-colour red/green

| Product characteristics | |
|---|---|
| Type of light | infrared light |
| Electrical design | PNP |
| Protection | IP 65; IP 67; IP 69K; (with protective tube: IP 69K) |
| **Application** | |
| Protective function | access prevention body protection |

# OY413S

## Safety light grid

OYA0910-04-2-09-P-1-A

| | | |
|---|---|---|
| **Electrical data** | | |
| Operating voltage tolerance | [%] | 20 |
| Operating voltage | [V] | 24 DC |
| Protection class | | III |
| Reverse polarity protection | | yes |
| Power-on delay time | [s] | < 2 |
| Type of light | | infrared light |
| Wave length | [nm] | 950 |
| Receiver | | |
| Current consumption | [mA] | 83 |
| Current consumption heating | [mA] | 417 |
| Transmitter | | |
| Current consumption | [mA] | 42 |
| Current consumption heating | [mA] | 417 |
| **Outputs** | | |
| Electrical design | | PNP |
| Number of OSSD outputs | | 2 |
| Max. current load per OSSD output | [mA] | 400;  (24 V) |
| Short-circuit protection | | yes |
| **Detection zone** | | |
| Protected area height | [mm] | 910 |
| Number of beams | | 4 |
| Protection area width (low light intensity) | [m] | 0...3 |
| Protection area width (high light intensity) | [m] | 2...10 |
| **Response times** | | |
| Response time | [ms] | 3.5 |
| **Operating conditions** | | |
| Ambient temperature | [°C] | -20...55 |
| Max. relative air humidity | [%] | 95 |
| Protection | | IP 65; IP 67; IP 69K;  (with protective tube: IP 69K) |
| **Tests / approvals** | | |
| EMC | | IEC 61496-1 |
| Shock resistance | | IEC 61496-1 |
| Vibration resistance | | IEC 61496-1 |
| **Safety classification** | | |
| ESPE type (IEC 61496-1) | | 2 |
| Complies with the requirements | | ISO 13849-1: 2015 category 2, PL c |
| | | IEC 62061 SIL 1 |
| Mission time TM | [h] | 175200 |
| PFH | [1/h] | 2,0E-08 |

# OY413S

## Safety light grid

OYA0910-04-2-09-P-1-A

| Mechanical data | | |
|---|---|---|
| Weight | [g] | 6275 |
| Dimensions | [mm] | 1177 x 76 x 74 |
| Materials | | thermowell: PMMA transparent; Protective cap: POM; clamp: stainless steel (316L/1.4404); Sealing: silicone |
| Length L | [mm] | 1177 |

| Displays / operating elements | | |
|---|---|---|
| Display | transmitter | 1 x LED |
| | receiver | 2 x LED |

| Remarks | |
|---|---|
| Pack quantity | 1 pcs. |

**Electrical connection - receiver**

Cable: 15 m, PVC; Maximum cable length: 100 m; 10 x 0.34 mm²

Connection

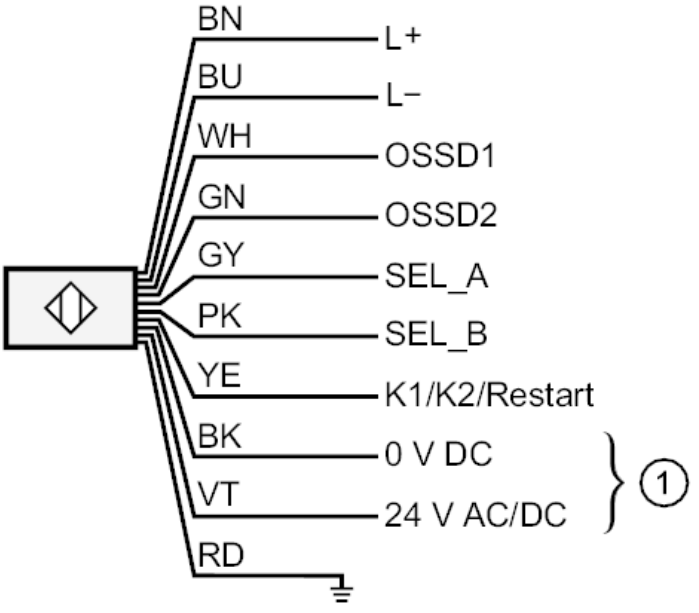


1: heating
Core colours :

| | |
|---|---|
| BK = | black |
| BN = | brown |
| BU = | blue |
| GN = | green |
| GY = | grey |
| PK = | pink |
| RD = | red |
| VT = | lilac |
| WH = | white |
| YE = | yellow |

# OY413S

## Safety light grid

OYA0910-04-2-09-P-1-A

### Electrical connection - transmitter

Cable: 15 m, PVC; 8 x 0.34 mm²

Connection

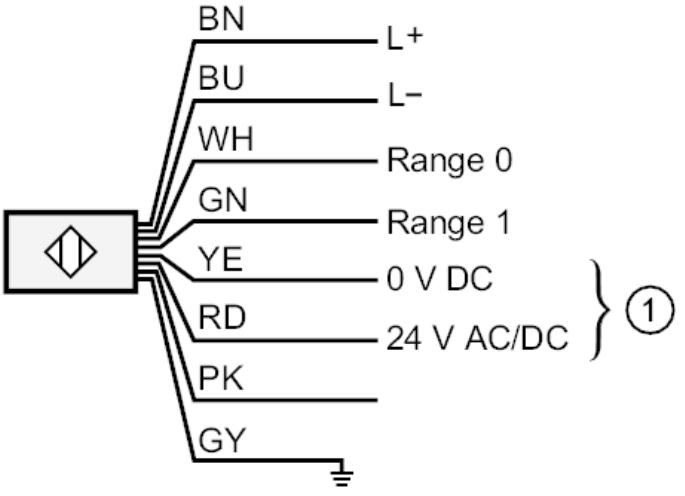


| | |
|---|---|
| 1: | heating |
| PK: | not used |
| | Core colours : |
| BN = | brown |
| BU = | blue |
| GN = | green |
| GY = | grey |
| PK = | pink |
| RD = | red |
| WH = | white |
| YE = | yellow |