

Image may differ from product. See technical specification for details.

NNF 5015 ADB-2LSV

Double row full complement cylindrical roller bearing, NNF design, with integral sealing and relubrication feature

Double row full complement cylindrical roller bearings incorporate a maximum number of rollers and are therefore suitable for very heavy radial loads in combination with moderate

speeds. Having three flanges on the two-piece inner ring and one central flange on the outer ring, NNF design bearings can locate the shaft axially in both directions. Two snap ring grooves in the outer ring simplify mounting and save space axially.

- Very high radial load carrying capacity
- High radial stiffness
- Long service life
- Locate the shaft axially in both directions
- Sealed for increased reliability, with relubrication feature

Overview

Dimensions

Bore diameter	75 mm
Outside diameter	115 mm
Width	54 mm

Performance

Basic dynamic load rating	224 kN
Basic static load rating	310 kN
Limiting speed	1 100 r/min

Properties

Bearing part	Complete bearing
Axial displacement capability	None
Number of rows	2
Locating feature, bearing outer ring	Snap ring groove
Bore type	Cylindrical
Cage	Without
Number of flanges, outer ring	1
Number of flanges, inner ring	2
Loose flange	None
Radial internal clearance	CN
Tolerance class	Normal
Coating	Without
Sealing	Seal on both sides
Sealing type	Contact
Lubricant	Grease
Relubrication feature	With

Logistics

Product net weight	1.84 kg
UNSPSC code	31171505

Technical specification

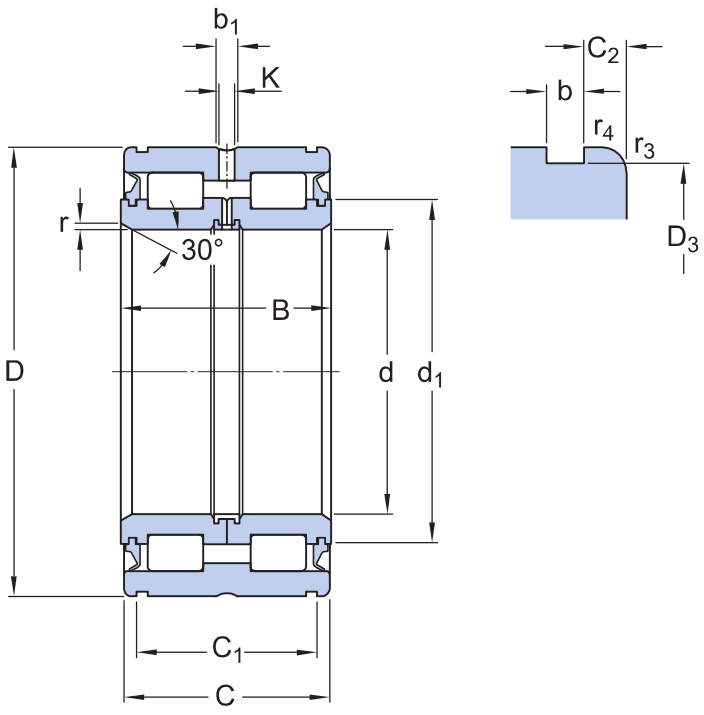

Dimensions

d	75 mm	Bore diameter
D	115 mm	Outside diameter
B	54 mm	Width
C	53 mm	Outer ring width (sealed bearing)
d_1	≈ 90 mm	Shoulder diameter inner ring
D_3	112.1 mm	Snap ring groove diameter at outer ring
C_1	48.2 mm	Distance between two snap ring grooves of the outer ring outside surface
	+ 0.2 mm	Tolerance for distance C_1
C_2	2.4 mm	Distance outer ring side face - snap ring groove (sealed bearing)
b	4.2 mm	Width snap ring groove outer ring
b_1	9.5 mm	Width annular lubrication groove outer ring
K	5 mm	Diameter lubrication hole (outer ring)
r	min. 1 mm	Chamfer dimension (sealed bearing)
$r_{3,4}$	min. 0.6 mm	Chamfer dimension

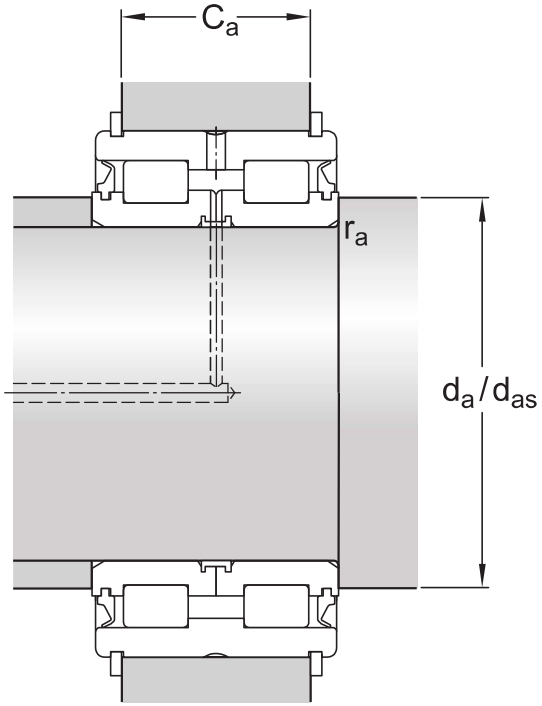

Abutment dimensions

d_a	min. 80 mm	Abutment diameter shaft
d_{as}	87 mm	Abutment diameter shaft
C_{a1}	43 mm	Abutment width applying for SW snap rings (sealed brg.)
	– 0.2 mm	Tolerance for abutment C_a (SW snap rings)
C_{a2}	40 mm	Abutment width applying for DIN 471 snap rings (sealed brg.)
	– 0.2 mm	Tolerance for abutment C_a (DIN 471 snap rings)
r_a	max. 0.6 mm	Fillet radius

Calculation data

Basic dynamic load rating	C	224 kN
Basic static load rating	C_0	310 kN
Fatigue load limit	P_u	40 kN
Limiting speed		1 100 r/min
Minimum load factor	k_r	0.4

Associated products

Snap ring Seeger	SW 115
Snap ring in accordance with DIN 471	115x4

Tolerances and clearances

GENERAL BEARING SPECIFICATIONS

- Tolerances: Normal
- Radial internal clearance: table
- Axial internal clearance

BEARING INTERFACES

- Seat tolerances for standard conditions
- Tolerances and resultant fit

More Information

Product details

- Designs and variants
- General bearing specifications
- Loads
- Temperature limits
- Permissible speed
- Design considerations
- Designation system

Engineering information

- Principles of rolling bearing selection
- General bearing knowledge
- Bearing selection process
- Bearing failure and how to prevent it

Tools

- SimPro Quick
- SKF Product select
- LubeSelect for SKF greases
- Heater selection tool
- Oil Injection Method Program

Terms of use

By accessing and using this website / app owned and published by AB SKF (publ.) (556007-3495 · Gothenburg) (“SKF”), you agree to the following terms and conditions:

Warranty Disclaimer and Limitation of Liability
Although every care has been taken to assure the accuracy of the information on this website / app, SKF provides this information "AS IS" and DISCLAIMS ALL WARRANTIES, EXPRESS OR IMPLIED, INCLUDING, BUT NOT LIMITED TO, IMPLIED WARRANTIES OF MERCHANTABILITY AND FITNESS FOR A PARTICULAR PURPOSE. You acknowledge that your use of this website / app is at your sole risk, that you assume full responsibility for all costs associated with use of this website / app, and that SKF shall not be liable for any direct, incidental, consequential, or indirect damages of any kind arising out of your access to, or use of the information or software made available on this website / app.

Any warranties and representations in this website / app for SKF products or services that you purchase or use will be subject to the agreed upon terms and conditions in the contract for such product or service.

Further, for non-SKF websites / apps that are referenced in our website / app or where a hyperlink appears, SKF makes no warranties concerning the accuracy or reliability of the information in these websites / apps and assumes no responsibility for material created or published by third parties contained therein. In addition, SKF does not warrant that this website / app or these other linked websites / apps are free from viruses or other harmful elements.

Third Party Services
When viewing YouTube content via the SKF website(s) (i.e. using YouTube API Services), you agree to be bound by the YouTube Terms of Service.

Copyright
Copyright in this website / app copyright of the information and software made available on this website / app rest with SKF or its licensors. All rights are reserved. All licensed material will reference the licensor that has granted SKF the right to use the material. The information and software made available on this website / app may not be reproduced, duplicated, copied, transferred, distributed, stored, modified, downloaded or otherwise exploited for any commercial use without the prior written approval of SKF. However, it may be reproduced, stored and downloaded for use by individuals without prior written approval of SKF. Under no circumstances may this information or software be supplied to third parties.

This website /app includes certain images used under license from Shutterstock, Inc.

Trademarks and Patents
All trademarks, brand names, and corporate logos displayed on the website / app are the property of SKF or its licensors, and may not be used in any way without prior written approval by SKF. All licensed trademarks published on this website / app reference the licensor that has granted SKF the right to use the trademark. Access to this website / app does not grant to the user any license under any patents owned by or licensed to SKF.

Changes
SKF reserves the right to make changes or additions to this website / app at any time.