# DATASHEET - DILER-22-G(24VDC)



Similar to illustration

**Contactor relay, 24 V DC, N/O = Normally open: 2 N/O, N/C = Normally closed: 2 NC, Screw terminals, DC operation**

| | |
|---|---|
| **Part no.** | **DILER-22-G(24VDC)** |
| **Catalog No.** | **010042** |
| **Alternate Catalog No.** | **XTRM10A22TD** |
| **EL-Nummer (Norway)** | **4130354** |

## Delivery program

| | | | |
|---|---|---|---|
| Product range | | | DILER Mini-contactors |
| Application | | | Contactor relays |
| Description | | | with interlocked opposing contacts |
| Connection technique | | | Screw terminals |
| **Rated operational current** | | | |
| Conventional free air thermal current, 1 pole | | | |
| Open | | | |
| at 50 °C | $I_{th} = I_e$ | A | 10 |
| AC-15 | | | |
| 220 V 230 V 240 V | $I_e$ | A | 6 |
| 380 V 400 V 415 V | $I_e$ | A | 3 |
| **Contacts** | | | |
| N/O = Normally open | | | 2 N/O |
| N/C = Normally closed | | | 2 NC |
| Contact sequence | | | 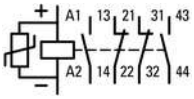 |
| **Code number and version of combination** | | | |
| Distinctive number | | | 22E |
| Actuating voltage | | | 24 V DC |
| Voltage AC/DC | | | DC operation |
| **Instructions** | | | Contact numbers to EN 50011<br>Coil terminal markings to EN 50005<br>Integrated diode-resistor combination<br>Coil rating 2.6 W |

## Technical data

### General

| | | | |
|---|---|---|---|
| Standards | | | IEC/EN 60947, EN 60947-5-1, VDE 0660, UL, CSA |
| Lifespan, mechanical | | | |
| DC operated | Operations | x $10^6$ | 20 |
| Maximum operating frequency | Operations/h | | 9000 |
| Climatic proofing | | | Damp heat, constant, to IEC 60068-2-78<br>Damp heat, cyclic, to IEC 60068-2-30 |
| Ambient temperature | | | |
| Open | | °C | -25 - +50 |
| Enclosed | | °C | - 25 - 40 |
| Mounting position | | | |
| Mounting position | | | As required, except vertical with terminals A1/A2 at the bottom |

| | | | |
|---|---|---|---|
| Mounting position | | | 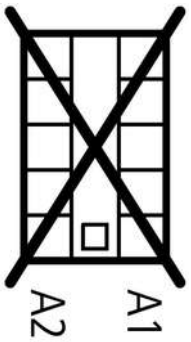 |
| Mechanical shock resistance (IEC/EN 60068-2-27) | | | |
| Half-sinusoidal shock, 10 ms | | | |
| Basic unit with auxiliary contact module | | g | |
| N/O contact | | g | 10 |
| N/C contact | | g | 8 |
| Degree of Protection | | | IP20 |
| Protection against direct contact when actuated from front (EN 50274) | | | Finger and back-of-hand proof |
| Altitude | | m | Max. 2000 |
| Weight | | | |
| DC operated | | kg | 0.211 |
| Terminal capacities | | $mm^2$ | |
| Screw terminals | | | |
| Solid | | $mm^2$ | 1 x (0.75 - 2.5)<br>2 x (0.75 - 2.5) |
| Flexible with ferrule | | $mm^2$ | 1 x (0.75 - 1.5)<br>2 x (0.75 - 1.5) |
| Solid or stranded | | AWG | 18 - 14<br>1 x (18 - 14)<br>2 x (18 - 14) |
| Stripping length | | mm | 8 |
| Terminal screw | | | M3.5 |
| Pozidriv screwdriver | | Size | 2 |
| Standard screwdriver | | mm | 0.8 x 5.5<br>1 x 6 |
| Max. tightening torque | | Nm | 1.2 |

## Contacts

| | | | |
|---|---|---|---|
| Interlocked opposing contacts to ZH 1/457, including auxiliary contact module | | | Yes |
| Rated impulse withstand voltage | $U_{imp}$ | V AC | 6000 |
| Overvoltage category/pollution degree | | | III/3 |
| Rated insulation voltage | $U_i$ | V AC | 690 |
| Rated operational voltage | $U_e$ | V AC | 600 |
| Safe isolation to EN 61140 | | | |
| between coil and auxiliary contacts | | V AC | 300 |
| between the auxiliary contacts | | V AC | 300 |
| Rated operational current | | A | |
| Conventional free air thermal current, 1 pole | | | |
| Open | | | |
| at 50 °C | $I_{th} = I_e$ | A | 10 |
| AC-15 | | | |
| 220 V 230 V 240 V | $I_e$ | A | 6 |
| 380 V 400 V 415 V | $I_e$ | A | 3 |
| 500 V | $I_e$ | A | 1.5 |
| DC current | | | |
| Notes | | | Switch-on and switch-off conditions based on DC-13, time constant as specified. |
| DC L/R ≦ 15 ms | | | |
| Contacts in series: | | A | |
| 1 | 24 V | A | 2.5 |

| | | | |
|---|---|---|---|
| 2 | 60 V | A | 2.5 |
| 3 | 110 V | A | 1.5 |
| 3 | 220 V | A | 0.5 |
| Control circuit reliability | Failure rate | λ | $<10^{-8}$, < one failure at 100 million operations (at $U_e$ = 24 V DC, $U_{min}$ = 17 V, $I_{min}$ = 5.4 mA) |
| Short-circuit rating without welding | | | |
| Maximum overcurrent protective device | | | |
| 220 V 230 V 240 V | | PKZM0 | 4 |
| 380 V 400 V 415 V | | PKZM0 | 4 |
| Short-circuit protection maximum fuse | | | |
| 500 V | | A gG/gL | 6 |
| 500 V | | A fast | 10 |
| Current heat loss at $I_{th}$ | | | |
| DC operated | | W | 1.1 |

## Magnet systems

| | | | |
|---|---|---|---|
| Voltage tolerance | | | |
| DC operated | | | |
| Notes | | | Smoothed DC, three-phase bridge rectifiers or smoothed double-wave rectification |
| Pick-up voltage | | | 0.85 - 1.3 |
| at 24 V: without auxiliary contact component (40 °C) | Pick-up | x $U_c$ | 0.7 - 1.3 |
| Power consumption | | | |
| DC operation | | | |
| DC operated | Pull-in = sealing | W | 2.3 |
| duty factor | | % DF | 100 |
| Changeover time at 100 % $U_S$ (recommended value) | | | |
| DC operated closing delay | | ms | 26 - 35 |
| DC operated N/O contact opening delay | | ms | 15 - 25 |
| DC operated With auxiliary contact module Max. closing delay | | ms | 70 |

## Rating data for approved types

| | | | |
|---|---|---|---|
| Auxiliary contacts | | | |
| Pilot Duty | | | |
| AC operated | | | A600 |
| DC operated | | | P300 |
| General Use | | | |
| AC | | V | 600 |
| AC | | A | 10 |
| DC | | V | 250 |
| DC | | A | 0.5 |

# Design verification as per IEC/EN 61439

| | | | |
|---|---|---|---|
| Technical data for design verification | | | |
| Rated operational current for specified heat dissipation | $I_n$ | A | 6 |
| Heat dissipation per pole, current-dependent | $P_{vid}$ | W | 0.4 |
| Equipment heat dissipation, current-dependent | $P_{vid}$ | W | 0 |
| Static heat dissipation, non-current-dependent | $P_{vs}$ | W | 2.3 |
| Heat dissipation capacity | $P_{diss}$ | W | 0 |
| Operating ambient temperature min. | | °C | -25 |
| Operating ambient temperature max. | | °C | 50 |
| IEC/EN 61439 design verification | | | |
| 10.2 Strength of materials and parts | | | |
| 10.2.2 Corrosion resistance | | | Meets the product standard's requirements. |
| 10.2.3.1 Verification of thermal stability of enclosures | | | Meets the product standard's requirements. |
| 10.2.3.2 Verification of resistance of insulating materials to normal heat | | | Meets the product standard's requirements. |
| 10.2.3.3 Verification of resistance of insulating materials to abnormal heat and fire due to internal electric effects | | | Meets the product standard's requirements. |

| | | | |
|---|---|---|---|
| 10.2.4 Resistance to ultra-violet (UV) radiation | | | Meets the product standard's requirements. |
| 10.2.5 Lifting | | | Does not apply, since the entire switchgear needs to be evaluated. |
| 10.2.6 Mechanical impact | | | Does not apply, since the entire switchgear needs to be evaluated. |
| 10.2.7 Inscriptions | | | Meets the product standard's requirements. |
| 10.3 Degree of protection of ASSEMBLIES | | | Does not apply, since the entire switchgear needs to be evaluated. |
| 10.4 Clearances and creepage distances | | | Meets the product standard's requirements. |
| 10.5 Protection against electric shock | | | Does not apply, since the entire switchgear needs to be evaluated. |
| 10.6 Incorporation of switching devices and components | | | Does not apply, since the entire switchgear needs to be evaluated. |
| 10.7 Internal electrical circuits and connections | | | Is the panel builder's responsibility. |
| 10.8 Connections for external conductors | | | Is the panel builder's responsibility. |
| 10.9 Insulation properties | | | |
| 10.9.2 Power-frequency electric strength | | | Is the panel builder's responsibility. |
| 10.9.3 Impulse withstand voltage | | | Is the panel builder's responsibility. |
| 10.9.4 Testing of enclosures made of insulating material | | | Is the panel builder's responsibility. |
| 10.10 Temperature rise | | | The panel builder is responsible for the temperature rise calculation. Eaton will provide heat dissipation data for the devices. |
| 10.11 Short-circuit rating | | | Is the panel builder's responsibility. The specifications for the switchgear must be observed. |
| 10.12 Electromagnetic compatibility | | | Is the panel builder's responsibility. The specifications for the switchgear must be observed. |
| 10.13 Mechanical function | | | The device meets the requirements, provided the information in the instruction leaflet (IL) is observed. |

## Technical data ETIM 7.0

| | | |
|---|---|---|
| Low-voltage industrial components (EG000017) / Contactor relay (EC000196) | | |
| Electric engineering, automation, process control engineering / Low-voltage switch technology / Contactor (LV) / Contactor relay (ecl@ss10.0.1-27-37-10-01 [AAB716014]) | | |
| Rated control supply voltage Us at AC 50HZ | V | 0 - 0 |
| Rated control supply voltage Us at AC 60HZ | V | 0 - 0 |
| Rated control supply voltage Us at DC | V | 24 - 24 |
| Voltage type for actuating | | DC |
| Rated operation current Ie, 400 V | A | 3 |
| Connection type auxiliary circuit | | Screw connection |
| Mounting method | | DIN-rail/screw |
| Interface | | No |
| Number of auxiliary contacts as normally closed contact | | 2 |
| Number of auxiliary contacts as normally open contact | | 2 |
| Number of auxiliary contacts as normally closed contact, delayed switching | | 0 |
| Number of auxiliary contacts as normally open contact, leading | | 0 |
| With LED indication | | No |
| Number of auxiliary contacts as change-over contact | | 0 |
| Manual operation possible | | No |

## Approvals

| | | |
|---|---|---|
| Product Standards | | IEC/EN 60947-4-1; UL 508; CSA-C22.2 No. 14-05; CE marking |
| UL File No. | | E29184 |
| UL Category Control No. | | NKCR |
| CSA File No. | | 012528 |
| CSA Class No. | | 3211-03 |
| North America Certification | | UL listed, CSA certified |
| Specially designed for North America | | No |

## Characteristics

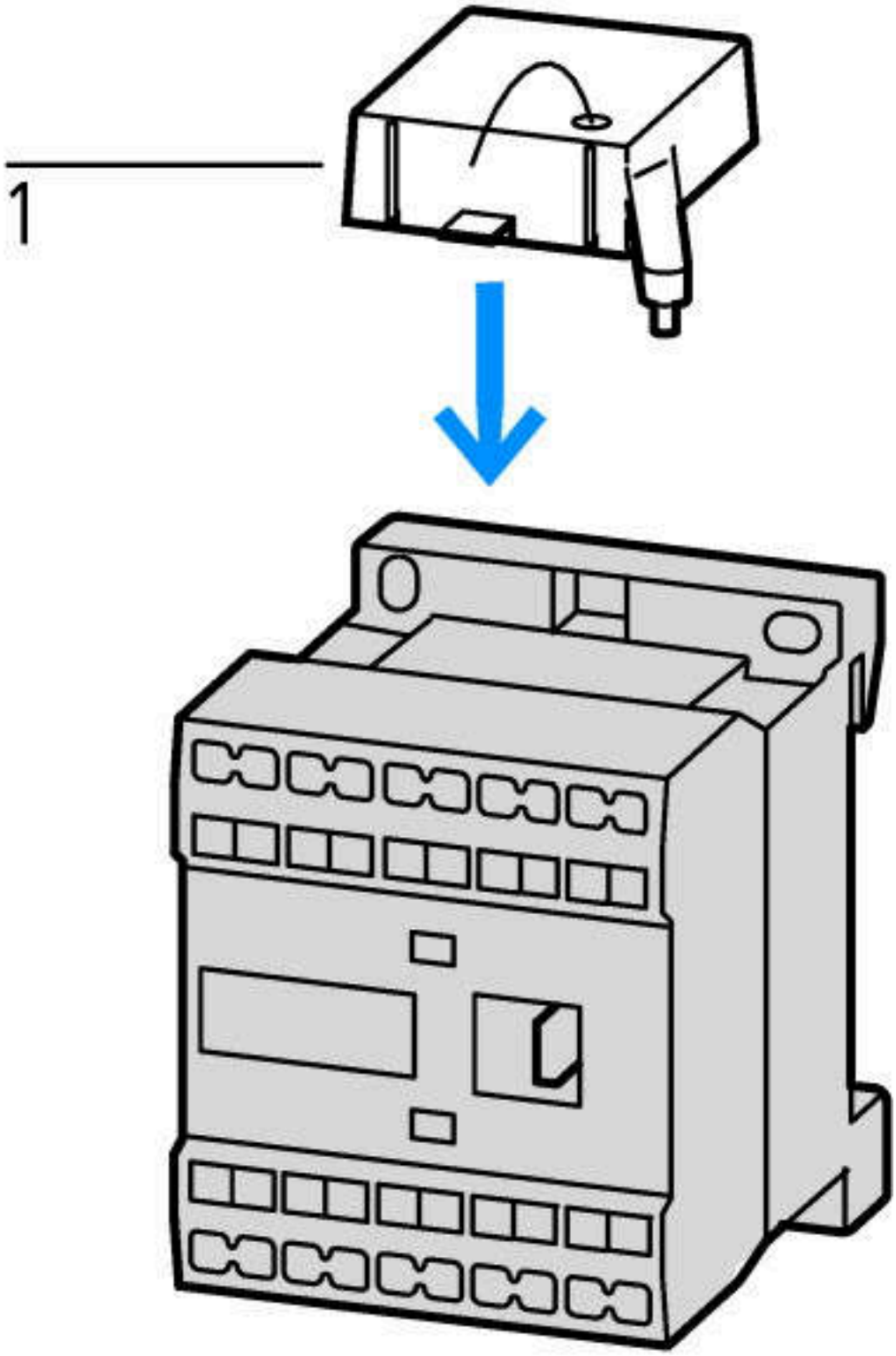


1: Suppressor

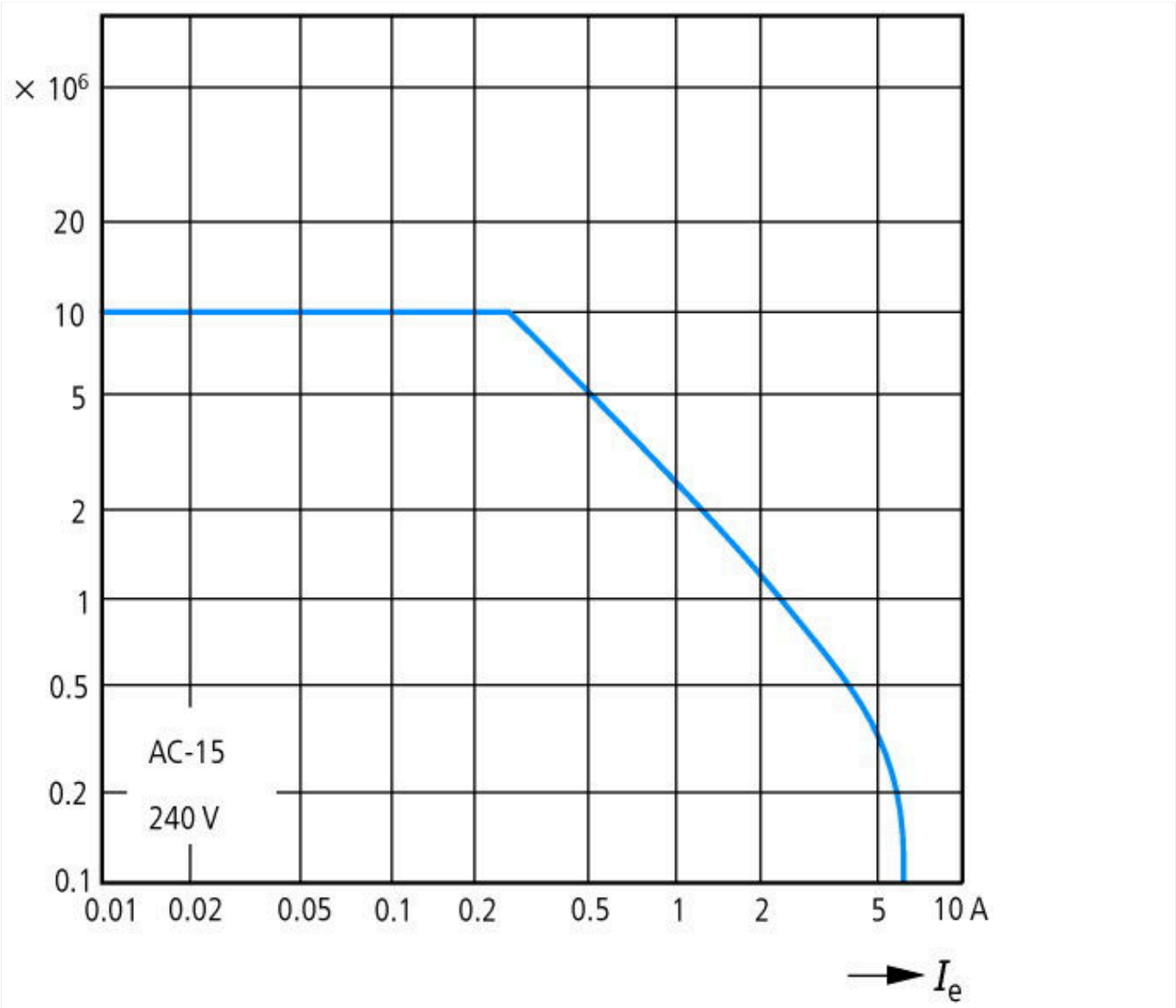


Component lifespan (operations)
Ie = Rated operational current

## Dimensions




DILER-...
DILER-...-G(-C)

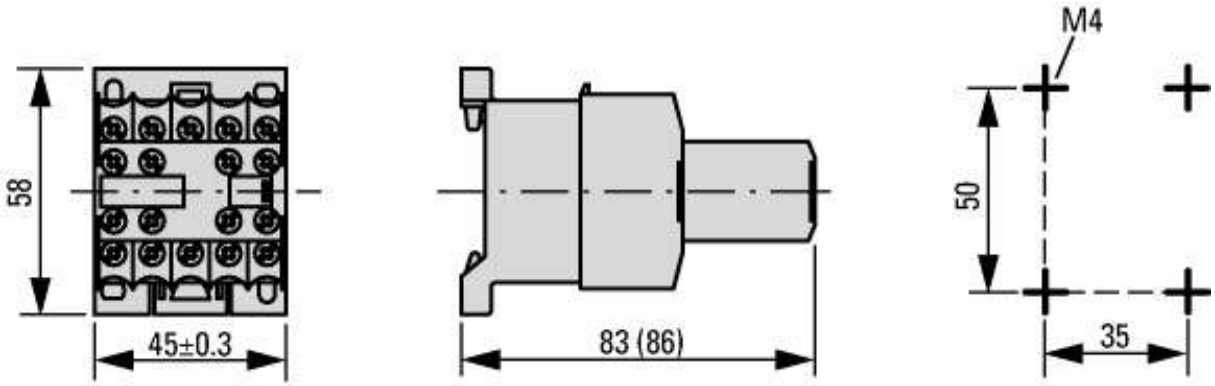


DILER-…(-C) + …DILE(-C)
DILER-…-G(-C) + …DILE(-C)

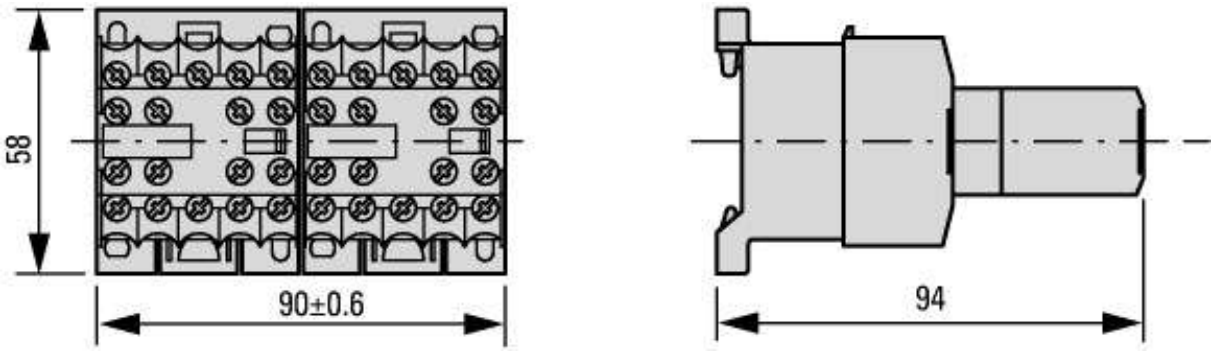


2DILE-… + MVDILE + …DILE
2DILE-…-G + MVDILE + …DILE

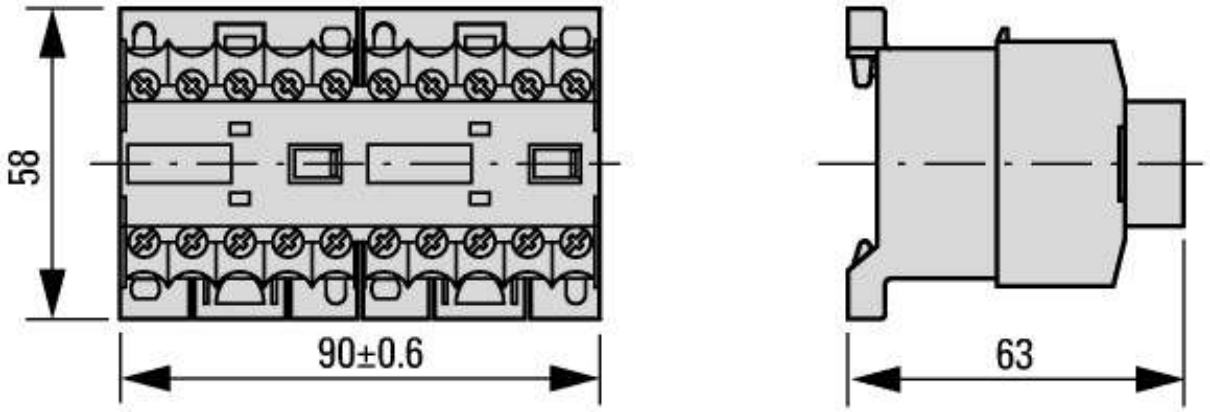


2DILE-… + MVDILE
2DILE-…-G + MVDILE


© 03/2021 by Eaton Industries GmbH