E33349

Universal process adapter

ADAPT UNI RD52

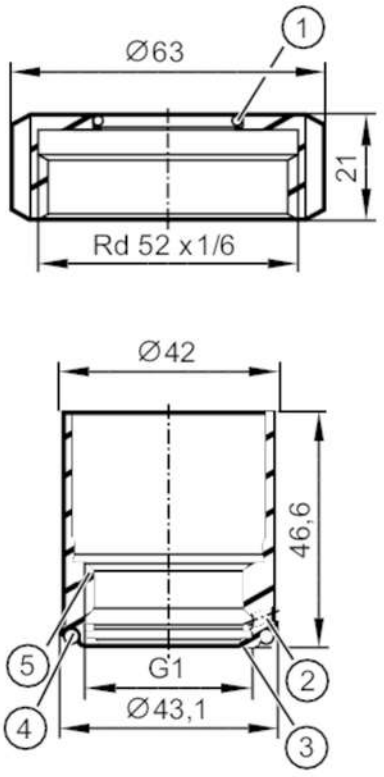

1 O-ring 30x2 FKM
2 Leakage port
3 sealing area for O-ring 24x2
4 O-ring 36x3 EPDM
5 Aseptoflex Vario

EC 1935/2004

Application		
Design		accessories for, PM17xx: (Endress+Hauser universal process adapter RD52), PY200x: (Endress+Hauser universal process adapter Uni 6" D85)
Pressure rating	[bar]	16
Tests / approvals		
Pressure Equipment Directive		A possible classification to PED depends on the application and has to be carried out by the user / operator.

E33349

Universal process adapter

ADAPT UNI RD52

Pressure Equipment Directive EAC		The adapter is intended for use in devices, machines and installations that do not fall under the categories of the technical rule TR CU 032/2013.
Safety instructions		The compatibility between medium and product material has to be checked in all applications.
Mechanical data		
Weight	[g]	390.1
Materials (wetted parts)		stainless steel (1.4435 / 316L) ; surface characteristics : Ra<0,4 / Rz 4
Sensor connection		G 1 Aseptoflex Vario
Process connection		universal process adapter Rd 52 Endress+Hauser Universal-Prozessadapter RD52; Universal-Prozessadapter Uni 6" D85
Sealing		Gasket
Hygienic equipment class to DIN 11866		H4
Accessories		
Items supplied		O-ring: 24 x 2, EPDM, FDA compliant, E30054
		O-ring: 30 x 2, FKM
		O-ring: 36 x 3, EPDM, FDA compliant
Accessories (optional)		O-ring: 24 x 2, FKM, FDA compliant, E30123
		sealing ring, PEEK, FDA compliant, E30124
Remarks		
Pack quantity		1 pcs.