

Metal angle bracket, including M20 cable gland

Part no.	**SL7/4-FW-T**
Article no.	**171455**
Catalog No.	**SL7/4-FW-T**

Delivery programme

Product range	SL7 signal towers SL4 signal towers
Basic function	Accessories
Basic function accessories	Including mounting bracket M20 cable gland
Mounting type	for vertical mounting
Material	Metal
	Gasket included as standard
For use with	SL4-PIB-T… SL7-CB-T...
Connection to SmartWire-DT	no

Approvals

Product Standards	IEC/EN 60947-5-1; UL 508; CSA-C22.2 No. 14-10; CSA-C22.2 No. 94-91; CE marking
UL File No.	E29184
UL Category Control No.	NKCR
CSA File No.	UL report applies to both US and Canada
CSA Class No.	NKCR7
North America Certification	UL listed, certified by UL for use in Canada
Degree of Protection	UL Type 4, 4X, 13

Technical data ETIM 5.0

Low-voltage industrial components (EG000017) / Wall bracket for signal tower (EC001153)

Electric engineering, automation, process control engineering / Low-voltage switch technology / Command and alarm device / Signal column element, attaching bracket (ecl@ss8-27-37-12-33 [AKF051010])

Mounting method	Wall mounting
Colour	-

Dimensions

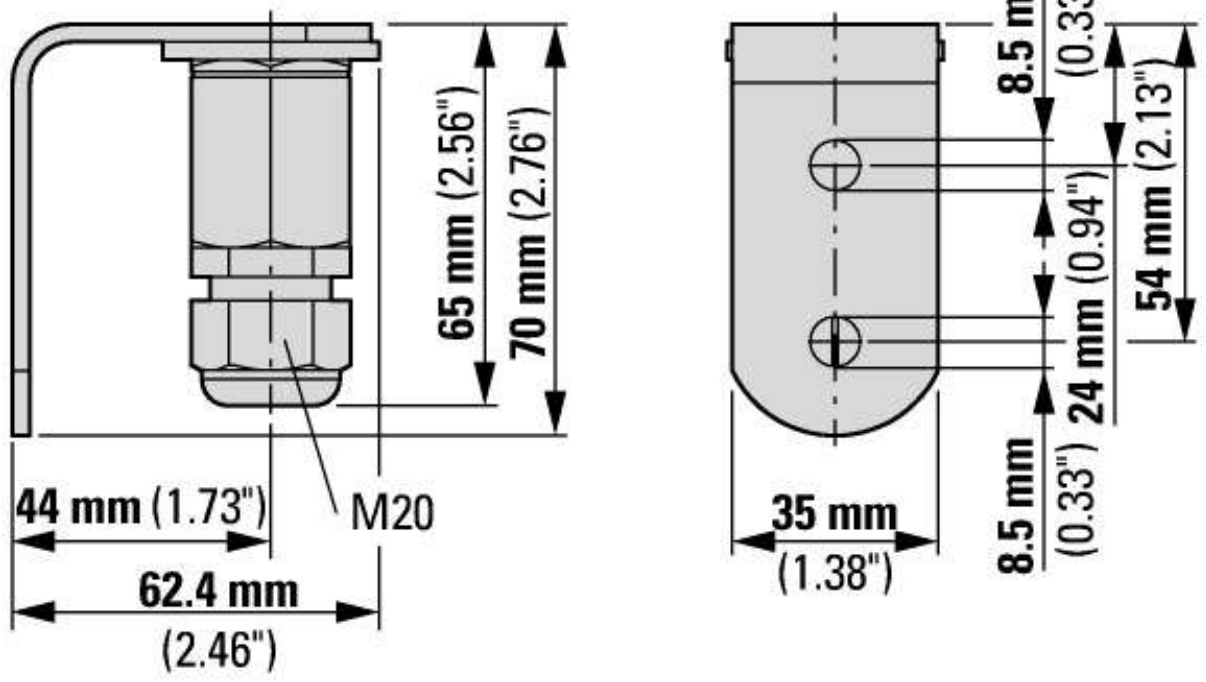

Additional product information (links)

IL047006ZU SL4/7 Accessories	
IL047006ZU SL4/7 Accessories	ftp://ftp.moeller.net/DOCUMENTATION/AWA_INSTRUCTIONS/IL047006ZU2013_02.pdf

© 07/2014 by Eaton Industries GmbH