# DLOI series - 304 Stainless steel with thermoplastic hose - Food grade



**Prevost UK LTD** - Unit G, Tower Business Park - Commercial Road - BB3 OFJ Darwen - Lancashire - United kingdom Phone.
(+44) 01254 873 389 -sales@prevost-ltd.co.uk - www.prevost.eu

| Description | | | | | |
|---|---|---|---|---|---|
| **Reference** | **ID/OD (mm)** | **Length (m)** | **Coupler** | **Swivel inlet BSPP male thread** | **Weight (kg)** |
| **DLOI 1625LS** | 16 x 24 | 25 | ELS 09 | G 1/2 | 44 |
| **DLOI 1920LS** | 19 x 28 | 20 | ELS 09 | G 1 | 42 |

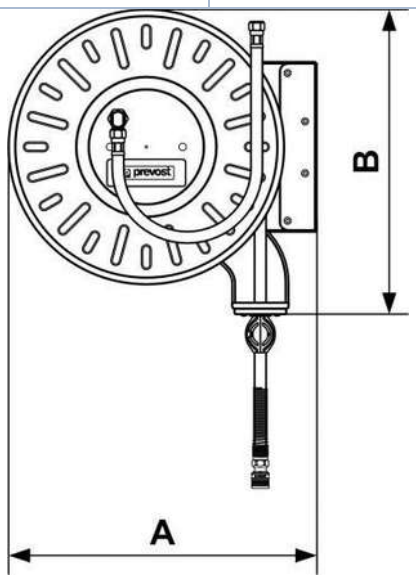


| Dimensions | | |
|---|---|---|
| **Reference** | **A mm** | **B mm** |
| **DLOI 1625LS** | 624 | 610 |
| **DLOI 1920LS** | 624 | 610 |