3/2-shut-off valve, mechanically operated, Series AS5-BAV

R412009260

Series AS5

The AVENTICS Series AS5 is a modular, versatile maintenance unit for universal application. This Series offers compact dimensions, is highly efficient, lightweight and easy-to-use. The AVENTICS Series AS guarantees reliability, safety, and efficiency with a simplified assembly and maintenance efforts.



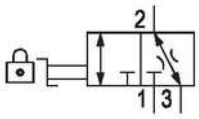

Technical data

Industry	Industrial
Activation	Mechanical
Nominal flow Qn	30000 l/min
Compressed air connection	G 3/4
Min. working pressure	0 bar
Max. working pressure	16 bar
Actuating element	rotary switch
Sealing principle	metal/metal sealing
Type	Ball Valve
Parts	Shut-off valve
Lock type	lockable
Lock type	for padlocks
Can be assembled into blocks	Can be assembled into blocks
Min. ambient temperature	-10 °C
Max. ambient temperature	50 °C
Medium	Compressed air Neutral gases
Max. particle size	25 µm
Compressed air connection, exhaust	G 3/4
Nominal flow Qn 1 to 2	30000 l/min

3/2-shut-off valve, mechanically operated, Series AS5-BAV

R412009260

~~Nominal flow Qn 2 to 3~~	~~130 l/min~~
Weight	0.825 kg
Housing material	Polyamide
Seal material	Polytetrafluorethylene
Material locking base	Steel, chrome-plated
Material, front cover	Acrylonitrile butadiene styrene
Material threaded bushing	Die cast zinc
Material locking base	Steel, chrome-plated
Surface locking base	galvanized
Material actuating control	Polyoxymethylene
Part No.	R412009260

Technical information

The pressure dew point must be at least 15 °C less than ambient and medium temperature and may not exceed 3 °C.

Nominal flow Qn with secondary pressure p2 = 6 bar at Δp = 1 bar

A change in the flow direction (from air supply on the left to air supply on the right) occurs by rotating installation by 180° about the vertical axis. Please see the operating instructions for further details.

3/2-shut-off valve, mechanically operated, Series AS5-BAV

R412009260

Dimensions

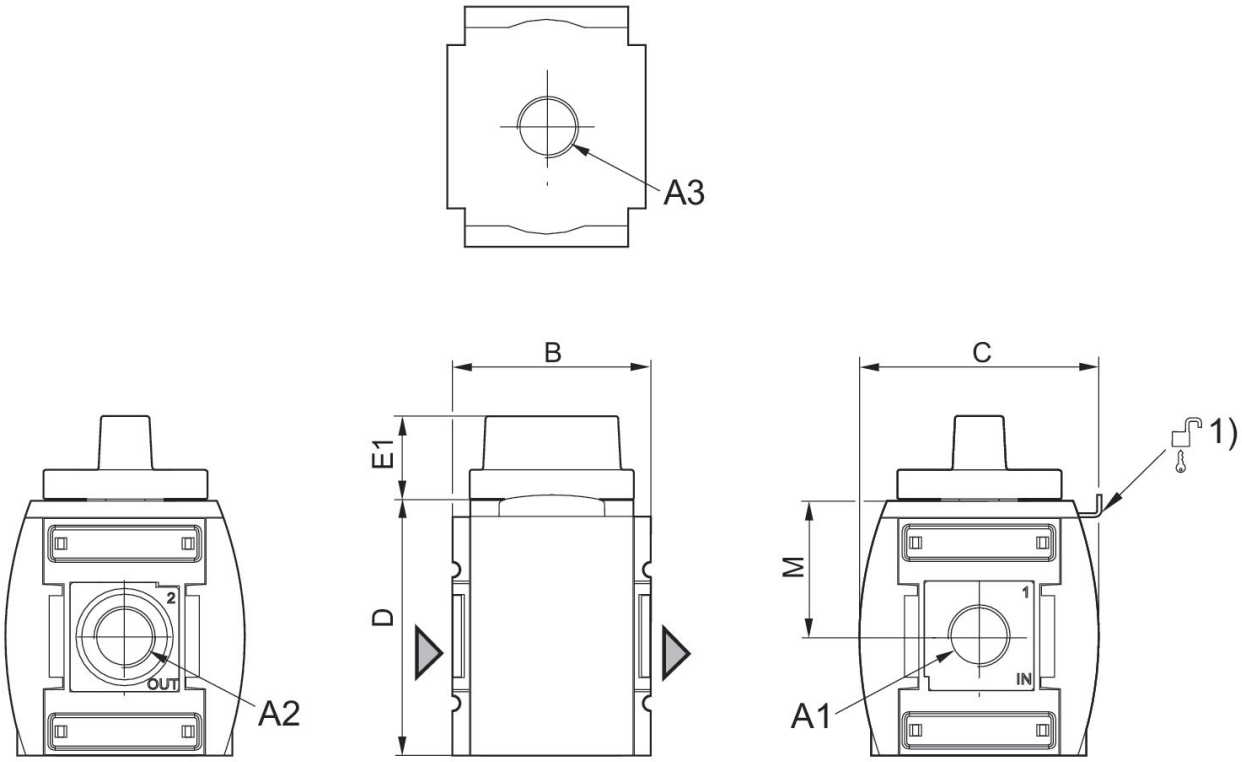

A1 = input
A2 = output
A3 = ventilation port
1) Mounting option for padlocks, max. shackle Ø 8

Dimensions in mm

Part No.	A1	A2	A3	B	C	D	E1	M
R412009260	G 3/4	G 3/4	G 3/4	85	103	109	36	58
R412009261	G 1	G 1	G 3/4	85	103	109	36	58

3/2-shut-off valve, mechanically operated, Series AS5-BAV

R412009260

Flow rate characteristic, p2 = 0,05 - 7 bar Rear exhaust

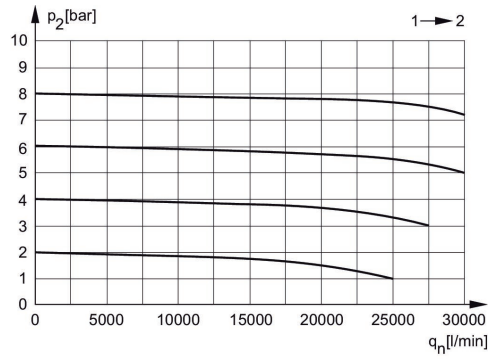

p2 = Secondary pressure
qn = Nominal flow

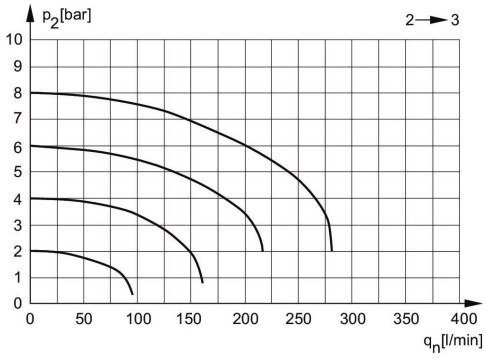

p2 = Secondary pressure
qn = Nominal flow

Accessories overview

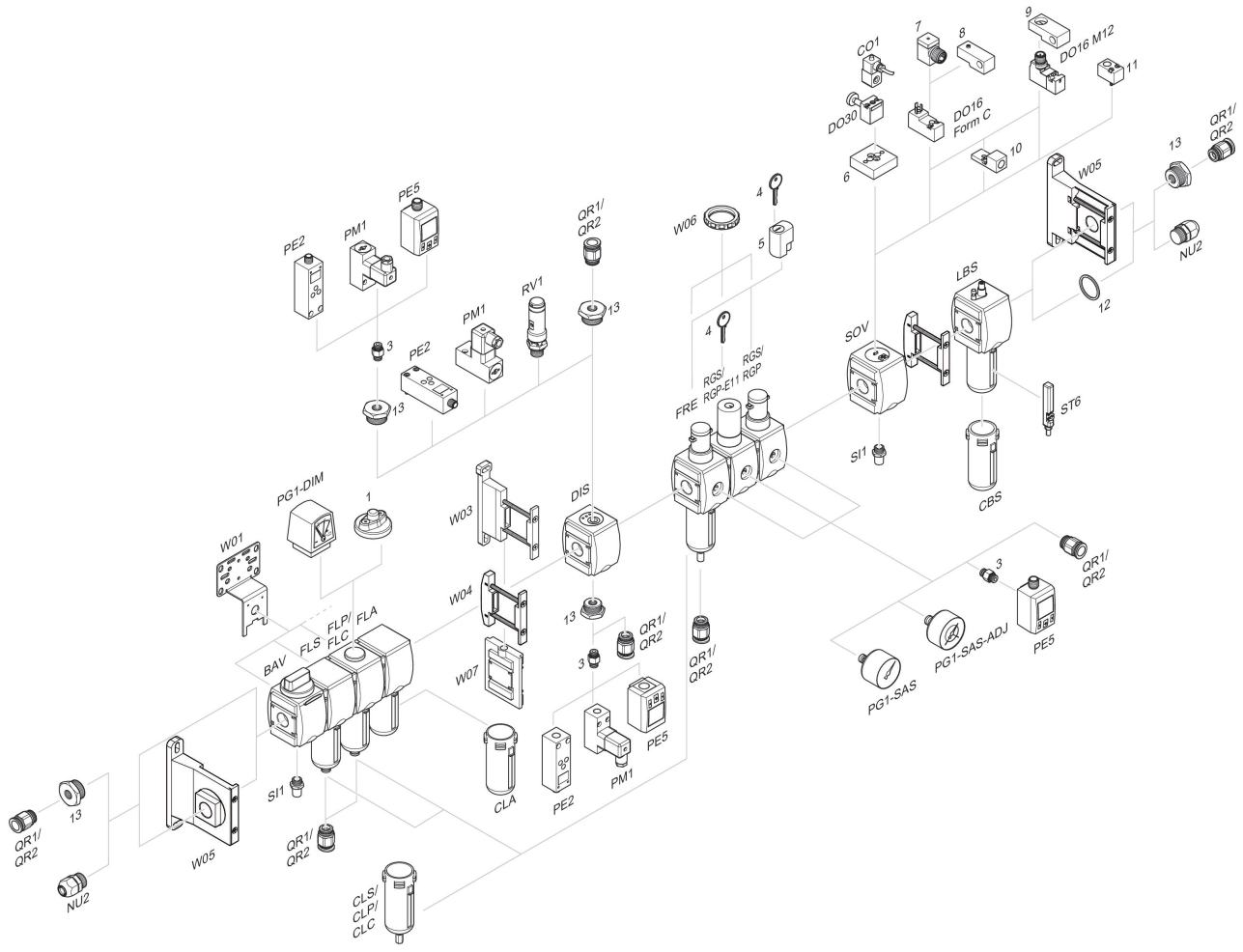

1 = contamination display 3 = Double nipple 4 = Key for E11 locking 5 = mortise lock 6 = Transition plate DO30 7 = Adapter, Series CON-VP 8 = Mounting aid DO16, form C 9 = Mounting aid DO16, M12 10 = Adapter for external pilot air 11 = Adapter pneumatic operation 12 = Sealing ring 13 = Reducing nipple