

# 800 mm Guide Rail for Hand Circular Saws

The guide rail was specially developed for use in metal, enabling precise cuts and ensuring even and controlled guidance of the hand circular saw. The anodized sliding coating on the top of the rail promotes comfortable handling and reduces the pushing resistance of the hand circular saw.

Product number: 3 21 33 039 00 0

## Technical data

### TECHNICAL DATA

| | |
|---|---|
| L | 800 mm |
| Weight | 1.4 kg |

## Suitable for the following tools

- F-IRON Cut 57 AS
- F-IRON Cut 57 AS Set 2 x 8 Ah

## Application examples

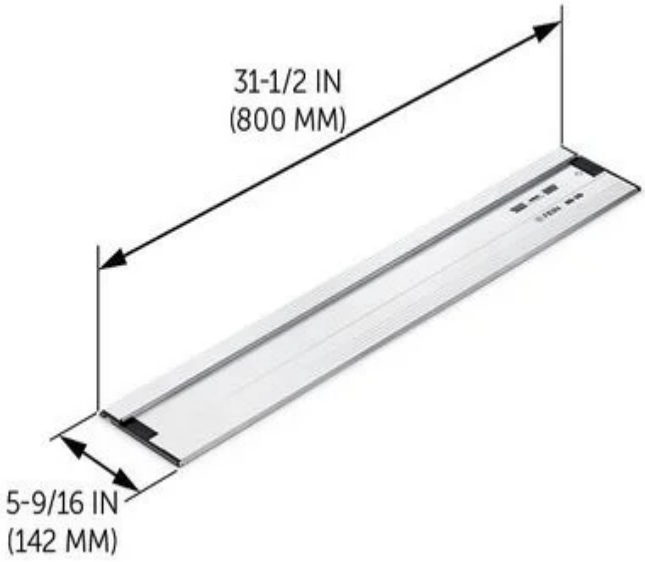
31-1/2 IN
(800 MM)
5-9/16 IN
(142 MM)



