KombiSIGN 70 / Accessories

Bracket for 1-sided mount. BK



Part No.:	975.840.85

MECHANICAL DATA	
Height	98 mm
Diameter	70 mm
Materials	PA-GF
Housing colour	Black
Weight with packaging	72 g
Product weight	69 g

APPROVAL DATA	
Conforms with CE	No
WEEE	No
Conforms with RED directive	No
Conforms with ATEX-directive	No
Conforms with CCC	No
Conforms with UL	No
Conforms with FCC	No
Conforms with IC	No
EAC certificate available	No
Conforms with AS-I	No
ICAO Certification	No
Conforms with DNV	No
Conforms with RoHS CN	No

! For additional installation and mounting information, refer to the appropriate user guide at www.werma.com. This printed copy is for information only and is subject to alteration.

KombiSIGN 70 / Accessories

Bracket for 1-sided mount. BK

DRAWING

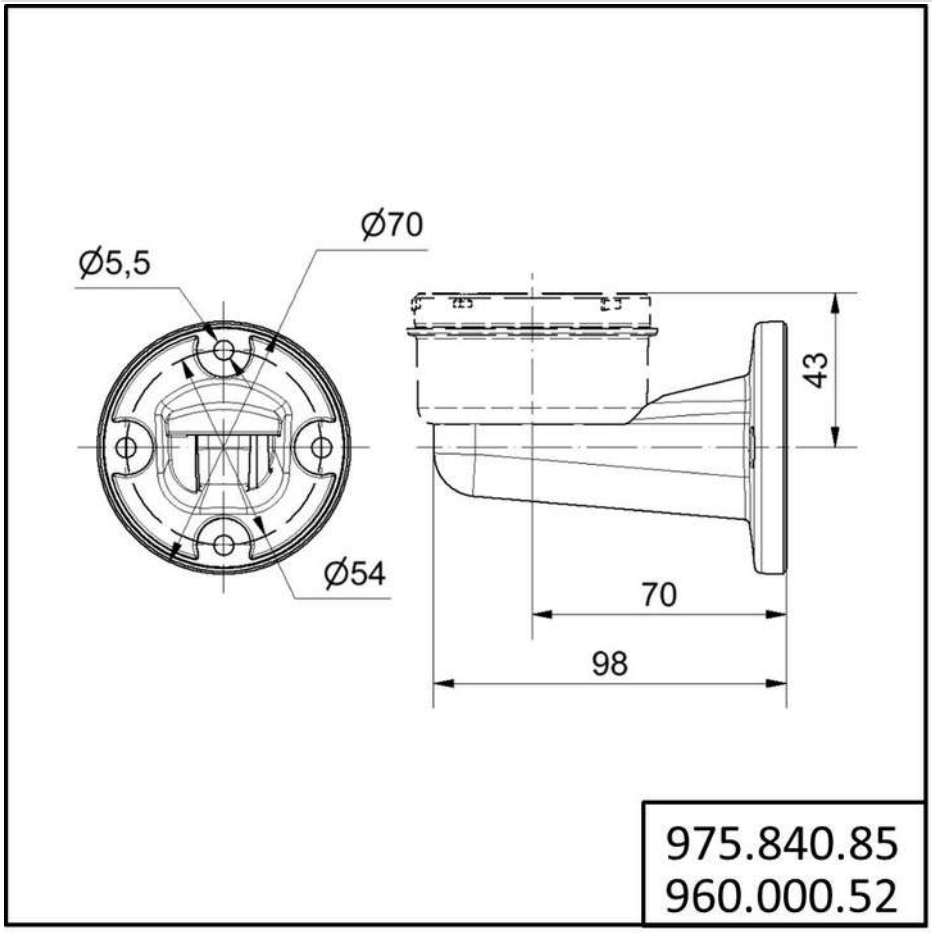

! For additional installation and mounting information, refer to the appropriate user guide at www.werma.com. This printed copy is for information only and is subject to alteration.