OVERALL ASSEMBLY DIMESNIONS:

EXTERNAL - 127 x 75 x 30

INTENAL - 122 x 70 x 23.5

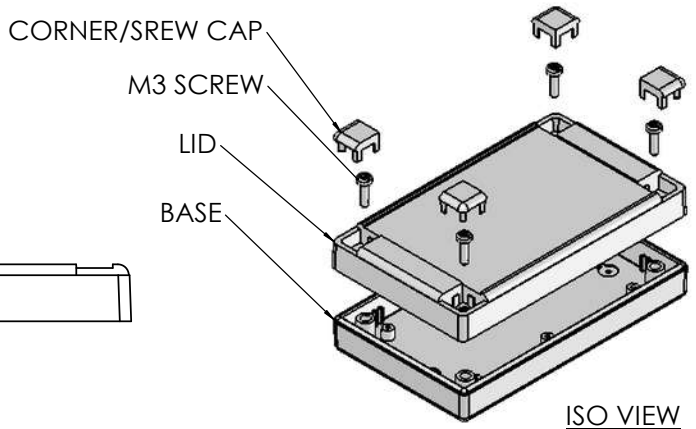

ISO VIEW
1:3



SECTION B-B

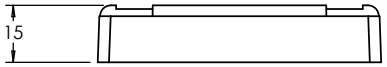

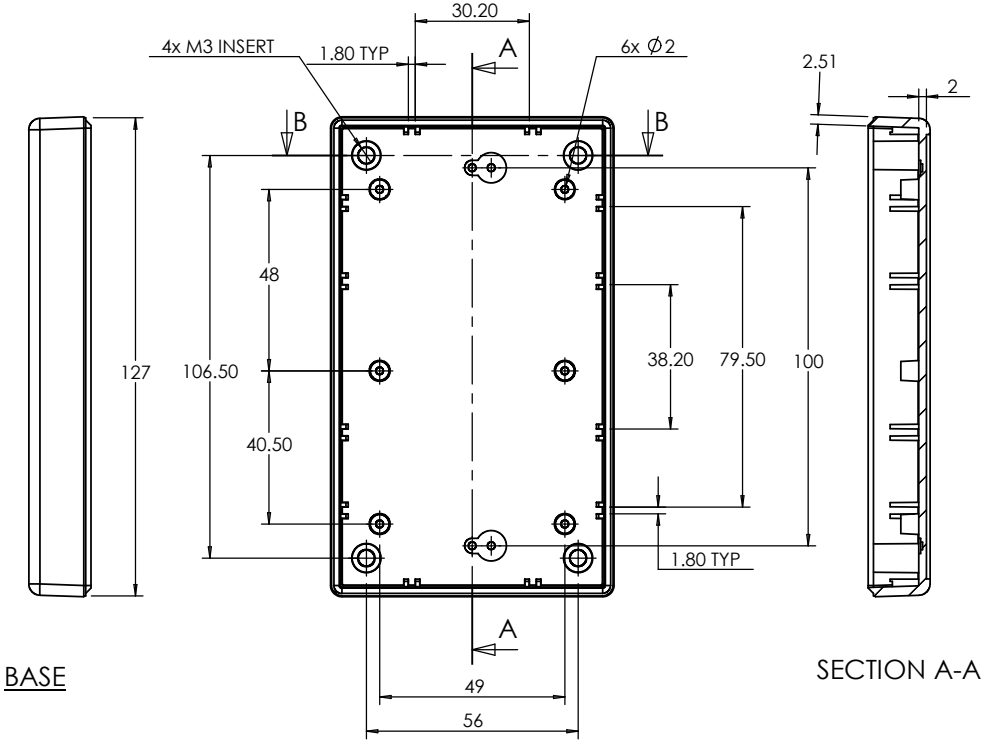

BASE

SECTION A-A

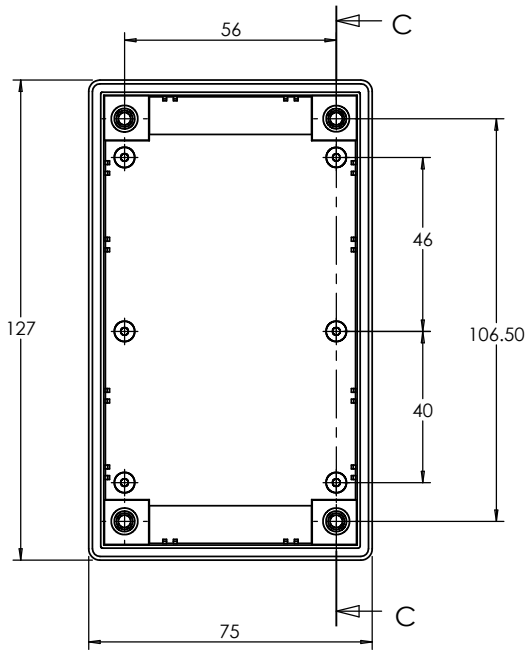

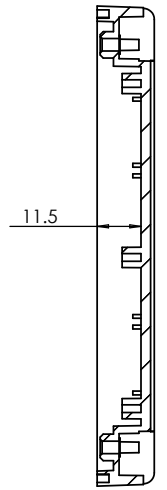

SECTION C-C

LID

BOSS ENCLOSURES JAMES CARTER RD, MILDENHALL, SUFFOLK. IP28 7DE TEL: 01638 716101 FAX: 01638 716554 EMAIL: SALES@BOSS-ENCLOSURES.CO.UK WEB: www.BOSS-ENCLOSURES.CO.UK				UNLESS OTHERWISE SPECIFIED: DIMENSIONS ARE IN MILLIMETERS	DO NOT SCALE DRAWING / REVISION. O
				FINISH. LIGHT SPARK	TITLE: ASSEMBLY DRG FOR 7004/14
	NAME	SIGNED	DATE	MATERIAL. ABS	DWG NO. 7004,14 / A4
DRAWN	S.HARDINGE	SJH	11/10/05		
CHK'D	-	-	-	PROJECTION.	SCALE. 1 : 2 / SHEET 1 OF 1