Horns and Sirens / Heavy-Duty multi-tone sounder

# Multi-t.sounder WM 32 tne 9-60VDC RD



**Part No.: 141.000.55**

| MECHANICAL DATA | |
|---|---|
| Length | 132 mm |
| Width | 165 mm |
| Height | 136 mm |
| Materials | PC/ABS |
| Housing colour | Red |
| Protection category | IP66 |
| Connection | Screw terminals |
| cross-sectional area maximum | 2,50mm² / 14AWG |
| Cable entry | Screwed cable gland |
| Cable entry minimum | d = 8 mm |
| Cable entry maximum | d = 12 mm |
| Tension relief | Present (conforms to VDE) |
| Type of fixing | Wall mounting |
| Working temperature minimum | -25°C |
| Working temperature maximum | +70°C |
| Weight with packaging | 598 g |
| Product weight | 515 g |

| ELECTRICAL DATA | |
|---|---|
| Operating voltage | 9-60V |
| Operating voltage type | DC |
| Operating voltage tolerance | +/- 0% |
| Rated operational voltage | 24 VDC |
| Rated operational current | 120 mA |
| Protection class | Protection class 2 |
| Pollution degree | 3 |

| OPTICAL DATA | |
|---|---|
| Service life optical | 5,000 h minimum |

| ACUSTICAL DATA | |
|---|---|
| Volume (max) at 1m distance | 110,0 dB (A) |
| Acoustic signal image | Multi-tone |
| Number of tones | 32 tone |
| Acoustic service life | 5,000 h minimum |

| APPROVAL DATA | |
|---|---|
| Conforms with CE | Yes |
| WEEE | No |
| Conforms with ATEX-directive | No |

! For additional installation and mounting information, refer to the appropriate user guide at www.werma.com. This printed copy is for information only and is subject to alteration.

Horns and Sirens / Heavy-Duty multi-tone sounder

# Multi-t.sounder WM 32 tne 9-60VDC RD

| | |
|---|---|
| Conforms with CCC | No |
| Conforms with UL | No |
| Conforms with FCC | No |
| Conforms with IC | No |
| EAC certificate available | Yes |
| Conforms with AS-I | No |
| ICAO Certification | No |
| Conforms with DNV | No |
| Conforms with RoHS CN | No |
| Conforms with VdS | No |

## DRAWING

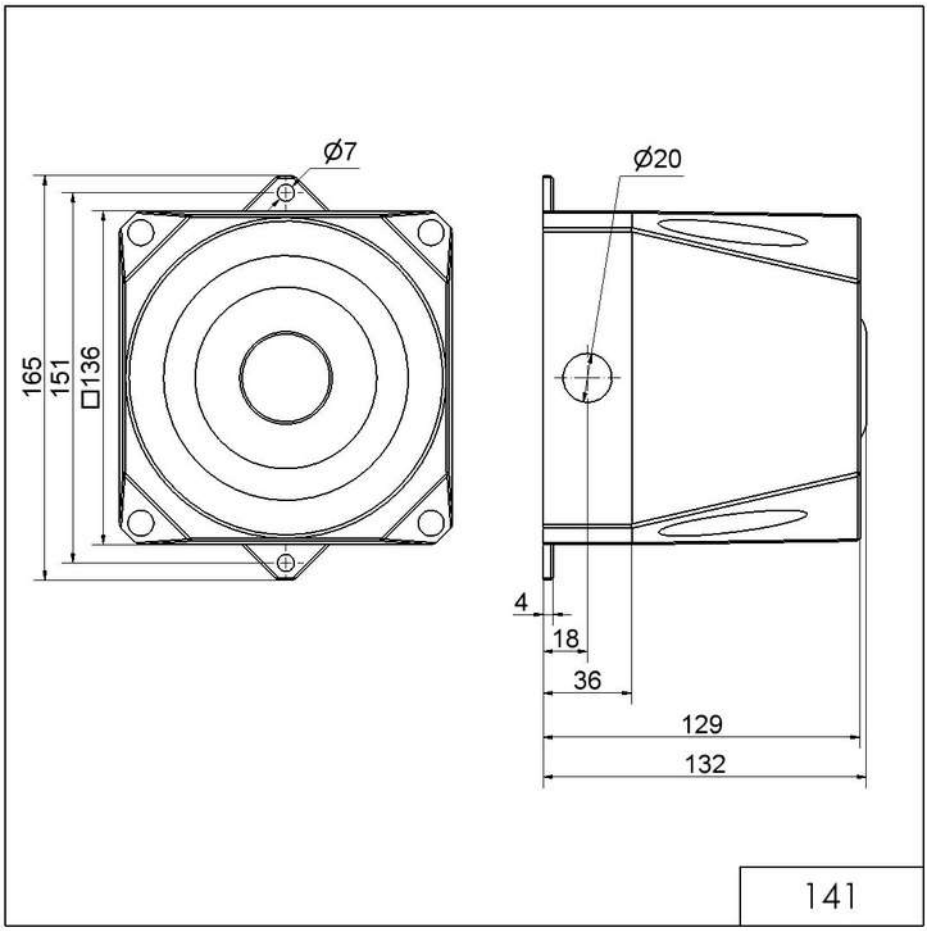


! For additional installation and mounting information, refer to the appropriate user guide at www.werma.com. This printed copy is for information only and is subject to alteration.