Littelfuse
Expertise Applied | Answers Delivered

340 Series RF Shielded / Watertight Panel Mount Fuse Holders for 3AB/3AG Fuses

RoHS



Dimensions

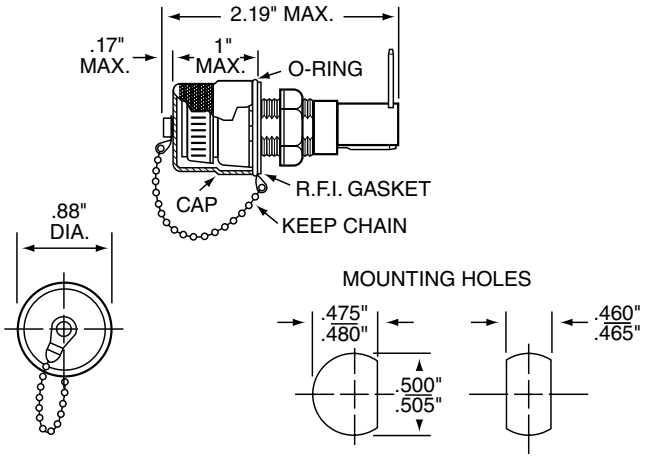

Additional Information

Datasheet

Resources

Samples

Product Characteristics

Compatible Fuses	**For 3AG and 3AB Fuses**
Description	Radio frequency shielded fuseholders eliminate possible transmission or reception of RF signals through the hole in the chassis in which the fuseholder is mounted. These fuseholders comply with the watertight construction requirement of MIL-PRF-19207 and the Shock-Safe requirements of IEC 60127-6. A rubber O-ring and conductive gasket maintain RF shielding and watertight construction.
Electrical	Rated at 20 amperes for any voltage up to 300 volts.
Ambient Temperature	–40°C to +85°C.
Dielectric Strength	4000 volts minimum.
Insulation Resistance	10,000 meghom minimum at 500 V.
Contact Resistance	Less than .005 ohms average at currents up to 1 amp.
Mounting	Withstand 15 Lb-in mounting torque. Maximum panel thickness is 0.31"
Molded Parts	Body material: Thermoplastic
Knob Material	Thermoplastic
Terminals	Brass. Tin plated, accept solder or .187" female connector.

* Ensure that proper fuse re-rating is factored in fuseholder selection.

Agency Approvals

Agency	Agency File Number
	7316

Ordering Information

Catalog Number	Brass Shielding Cap Finish
340 312	Nickel plated
340 313	Dull Black

© 2015 Littelfuse, Inc.
Specifications are subject to change without notice. Application testing is strongly recommended.
Revised: 06/03/15