# 24567-172 EUROPACPRO 19" SUBRACK KIT FOR BACKPLANE, HEAVY, SHIELDED, FRONT HANDLE, 3 U, 235 MM





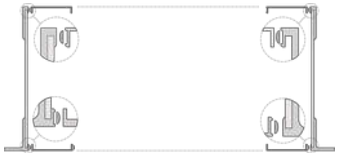

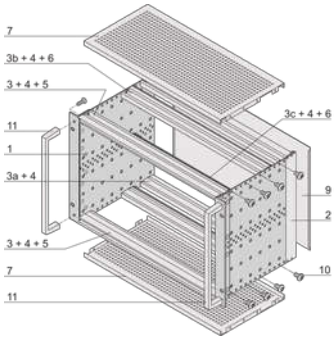


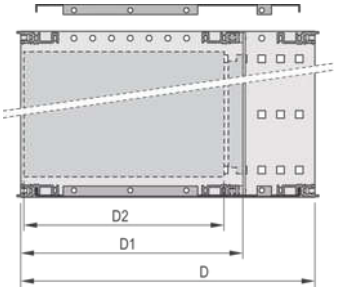


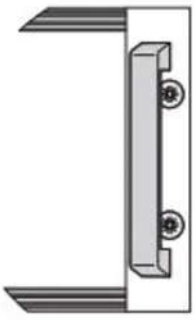

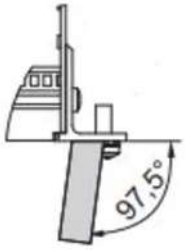


## KEY FEATURES

- Subrack with side panel type H ("Heavy"), 19" bracket is firmly fixed to side panel (tox-cold welded) and includes handles
- Modifications such as cutouts, different finishes or dimensions available
- Supplied as space-saving flat-pack
- Aluminum construction
- Horizontal rail type "Heavy"
- Rear horizontal rail for backplane mounting with insulation strip

EMC of approximately 40 dB at 1 GHz, 30 dB at 2 GHz, assuming that the front is covered with shielded front panels, testing in accordance with VG 95373 part 15

Shock and vibration tested to the German "Bahn" standards BN 411002, BN 411003

Internal and external dimensions in accordance with: IEC 60297-3-100, -101, IEEE 1101.1

IP 20, in accordance with IEC 60529

## PRODUCT ATTRIBUTES

Product Type: Subrack/Chassis

Rack Height: 3 U

Rack Width: 84 HP

Depth: 235 mm

For Mounting: Backplane

Board Depth: 160 mm; 220 mm / 160 mm; 220 mm

EMC Shielding: Yes

EMC Gasket Type: Textile

Static Load: 15 kg

Shock and Vibration Tolerance: 5 g (force)

Handle Included: Yes

Mounting: Rack

Complies With: IEC 60297-3-103

Package Quantity: 1

## ADDITIONAL PRODUCT DETAILS

EMC Shielded subrack for backplane mounting, heavy version with tox welded side panels and front handle.

Individual configuration: broad range of variants in height, width and depth; guide rails for a wide variety of applications; interior options; accessories and mounting material.

## CERTIFICATIONS






**North America**
All locations
+1.763.422.2661
Chat with us:
schroff.nvent.com

**Europe**
Straubenhardt, Germany
+49.7082.794.0
Betschdorf, France
+33.3.88.90.64.90
Warsaw, Poland
+48.22.209.98.35
Assago, Italy
+39.02.932.7141
Chat with us:
schroff.nvent.com

**Asia**
Shanghai, China
+86.21.2412.6943
Qingdao, China
+86.532.8771.6101
Singapore
+65.6768.5800
Shin-Yokohama, Japan
+81.45.476.0271
Chat with us:
schroff.nvent.com

**Middle East & India**
Dubai, United Arab Emirates
+971.4.378.1700
Bangalore, India
+91.80.6715.2001
Istanbul, Turkey
+90.216.250.7374
Chat with us:
schroff.nvent.com

nVent

Our powerful portfolio of brands:
nVent.com **CADDY ERICO HOFFMAN RAYCHEM SCHROFF TRACER**

© 2023 nVent. All nVent marks and logos are owned or licensed by nVent Services GmbH or its affiliates. All other trademarks are the property of their respective owners.

nVent reserves the right to change specifications without notice.