# Filter pressure regulator, Series AS2-FRE

**R412006213**

## AVENTICS Series AS2 Air Preparation Units

The AVENTICS Series AS2 is a modular, versatile maintenance unit for universal application. This Series offers compact dimensions, is highly efficient, lightweight and easy-to-use. The AVENTICS Series AS guarantees reliability, safety, and efficiency with a simplified assembly and maintenance efforts.




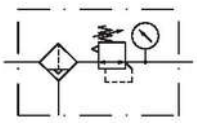

## Technical data

| | |
|---|---|
| Industry | Industrial |
| Parts | Filter pressure regulator |
| Reservoir | reservoir, polycarbonate, with PA protective guard |
| Port | G 3/8 |
| Nominal flow Qn | 2600 l/min |
| Filter porosity | 5 µm |
| Condensate drain | fully automatic, open without pressure |
| Pressure gauge | with pressure gauge |
| Min. working pressure | 1.5 bar |
| Max. working pressure | 16 bar |
| Min. ambient temperature | -10 °C |
| Max. ambient temperature | 50 °C |
| Min. regulation range | 0.5 bar |
| Max. regulation range | 10 bar |
| Lock type | for padlocks |
| Type | 1-part |
| Type | Can be assembled into blocks |
| Pressure supply | single |
| Mounting orientation | vertical |

# Filter pressure regulator, Series AS2-FRE

R412006213

| | |
|---|---|
| Regulator type | Diaphragm-type pressure regulator |
| Regulator function | with relieving air exhaust |
| Filter element | exchangeable |
| Filter reservoir volume | 28 cm³ |
| Max. achievable compressed air class acc. to ISO 8573-1:2010 | 6 : 7 : - |
| Medium | Compressed air<br>Neutral gases |
| Weight | 0.648 kg |

## Material

| | |
|---|---|
| Housing material | Polyamide |
| Seal material | Acrylonitrile butadiene rubber |
| Material front plate | Acrylonitrile butadiene styrene |
| Material threaded bushing | Die cast zinc |
| Material reservoir | Polycarbonate |
| Material protective guard | Polyamide |
| Material filter insert | Polyethylene |
| Part No. | R412006213 |

## Technical information

The pressure dew point must be at least 15 °C less than ambient and medium temperature and may not exceed 3 °C.

Note: Polycarbonate reservoirs are susceptible to solvents, supplementary information can be found at "Customer information".

Nominal flow Qn with secondary pressure p2 = 6 bar at Δp = 1 bar

A change in the flow direction (from air supply on the left to air supply on the right) occurs by rotating installation by 180° about the vertical axis. Please see the operating instructions for further details.

Also suitable for separation of fluid oil or water due to the design.

Pressure gauge enclosed separately

## Dimensions in mm

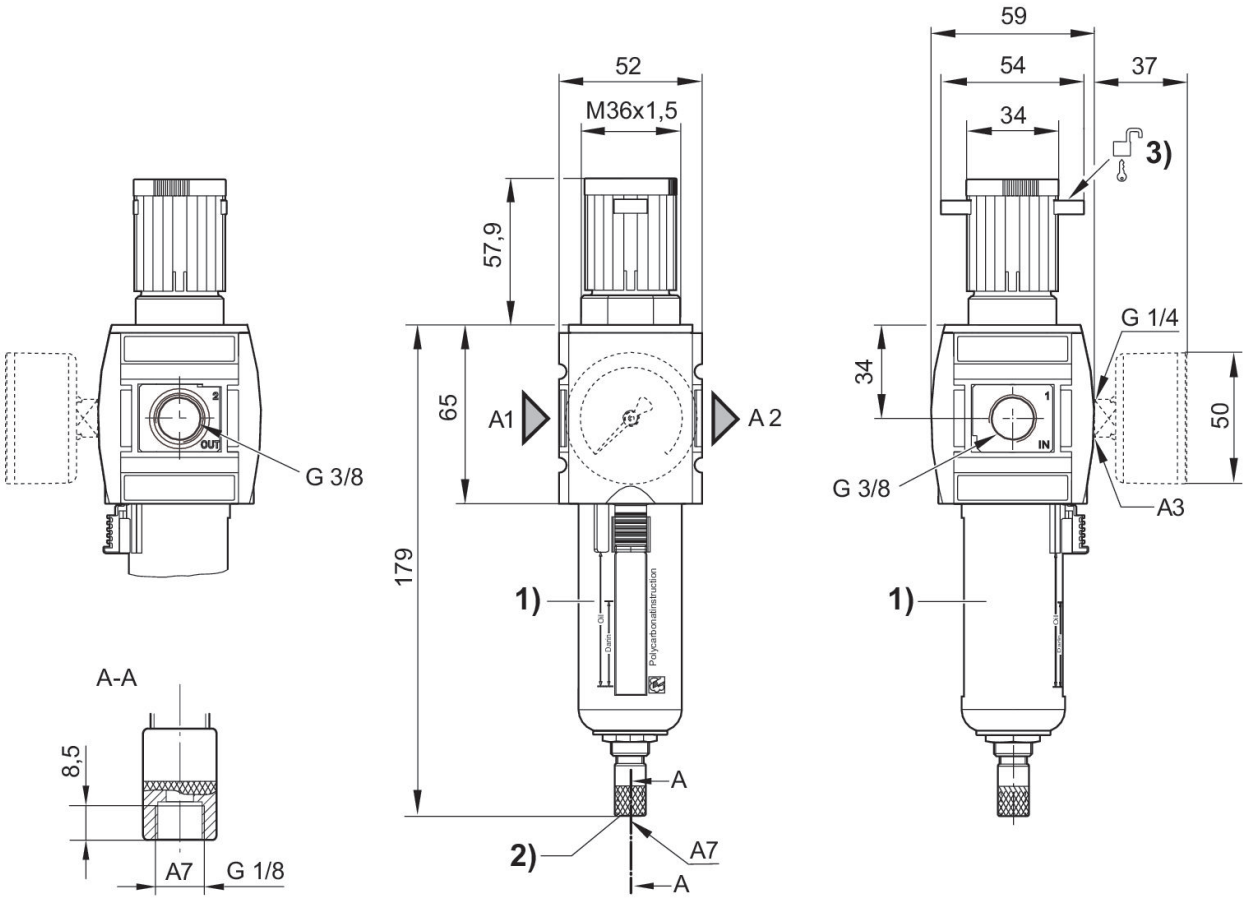


A1 = input
A2 = output
A3 = pressure gauge connection
A7 = condensate drain
1) Plastic reservoir and protective guard with window
2) Fully automatic condensate drain
3) Mounting option for padlocks, max. shackle Ø 8

## Flow rate characteristic, p2 = 0,05 - 7 bar

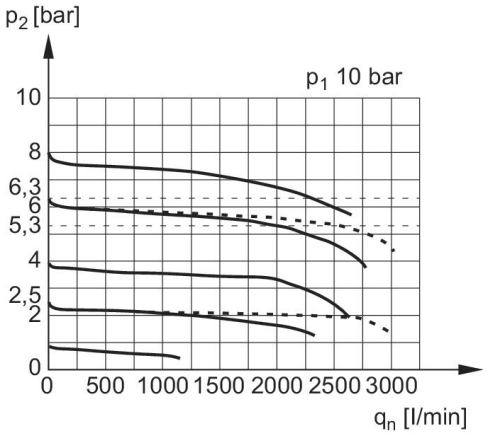


p1 = Working pressure
p2 = Secondary pressure
qn = Nominal flow

## Pressure characteristics curve

Version with safe rear exhaust in case of drop (removal) of pilot pressure

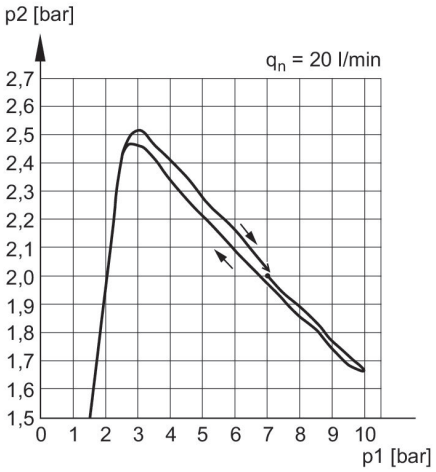


p1 = Working pressure
p2 = Secondary pressure
qn = Nominal flow

## Accessories overview

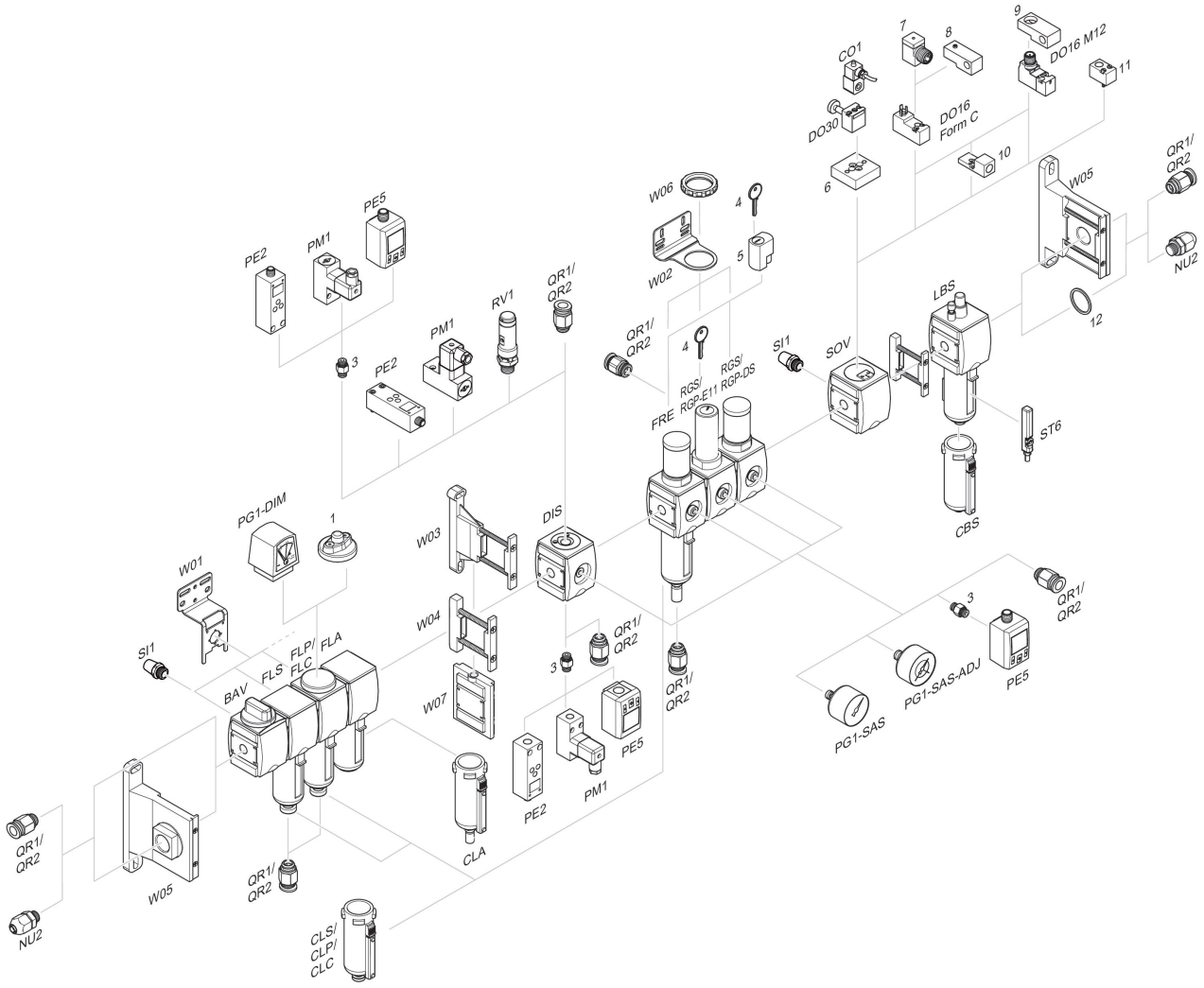


1 = contamination display 3 = Double nipple 4 = Key for E11 locking 5 = mortise lock 6 = Transition plate DO30 7 = Adapter, Series CON-VP 8 = Mounting aid DO16, form C 9 = Mounting aid DO16, M12 10 = Adapter for external pilot air 11 = Adapter pneumatic operation 12 = Sealing ring