Standard oil-mist lubricator, Series 651

G651AL0P10A0000

General series information
Series 651

- The AVENTICS Series 651 is an easy-to-install line of pneumatic filters, regulators and lubricators (FRLs) that offer the industry´s highest flow rates and widest temperature ratings. Available in 1/8-inch, and 1/4-inch port sizes, these FRLs are ideal for automotive and tire, packaging, food and beverage, and process applications requiring highly reliable operation and robust, modern-looking equipment.



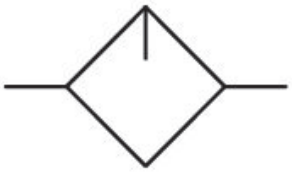

Technical data

Industry	Industrial
Parts	Lubricator
Reservoir	Reservoir polycarbonate
Compressed air connection	G 1/8
Nominal flow Qn	900 l/min
Working pressure min.	0 bar
Working pressure max	10 bar
Min. ambient temperature	5 °C
Max. ambient temperature	50 °C
Medium	Compressed air Neutral gases
Certificates	ATEX optional
Lubricator reservoir volume	42 cm³
Function	Oil-mist lubricator

Function	Can be assembled into blocks
Weight	0.24 kg

Material

Housing material	Aluminum
Material front plate	Polycarbonate
Seal material	Nitrile butadiene rubber
Material reservoir	Polycarbonate
Part No.	G651AL0P10A0000

Technical information

Recommended oil type

Non-detergent type and without aggressive additives (VG32-ISO3448)

Dimensions

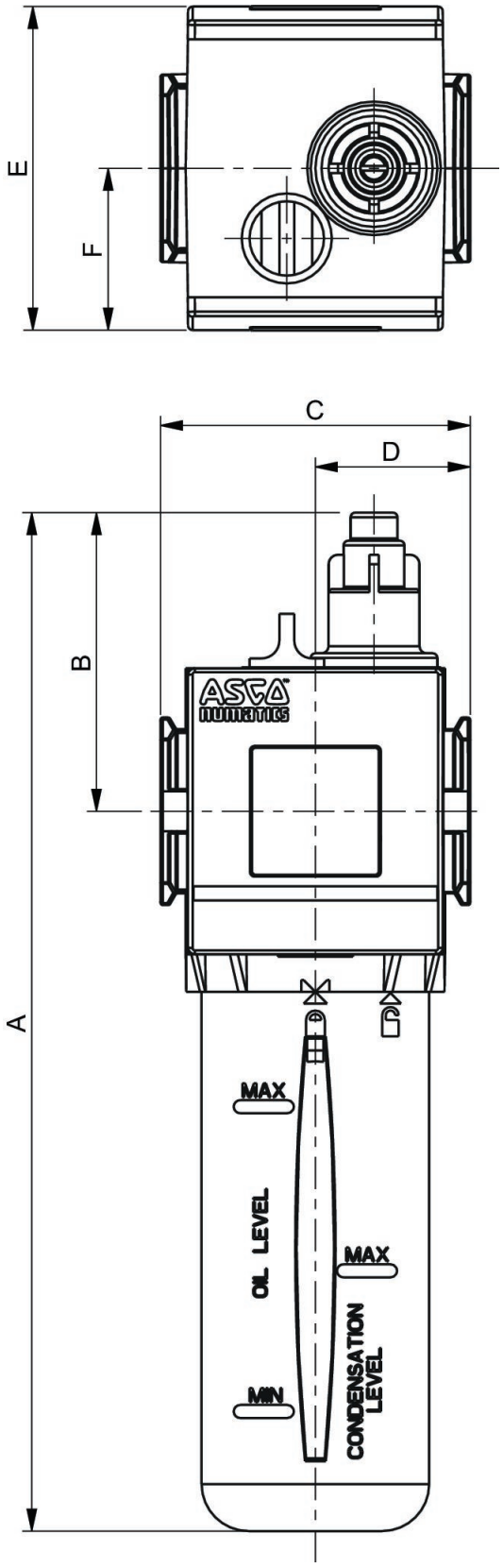

To remove the reservoir, allow a clearance of [[20] mm] from the bottom of the reservoir drain.

Series	651
A	198
B	58
C	50
D	25
E	58
F	29

Accessories overview

