EVC694

Y connection cable

YDSGHDA0MSS0002HDASTGH030MSS

Please see the technical note under "Downloads"

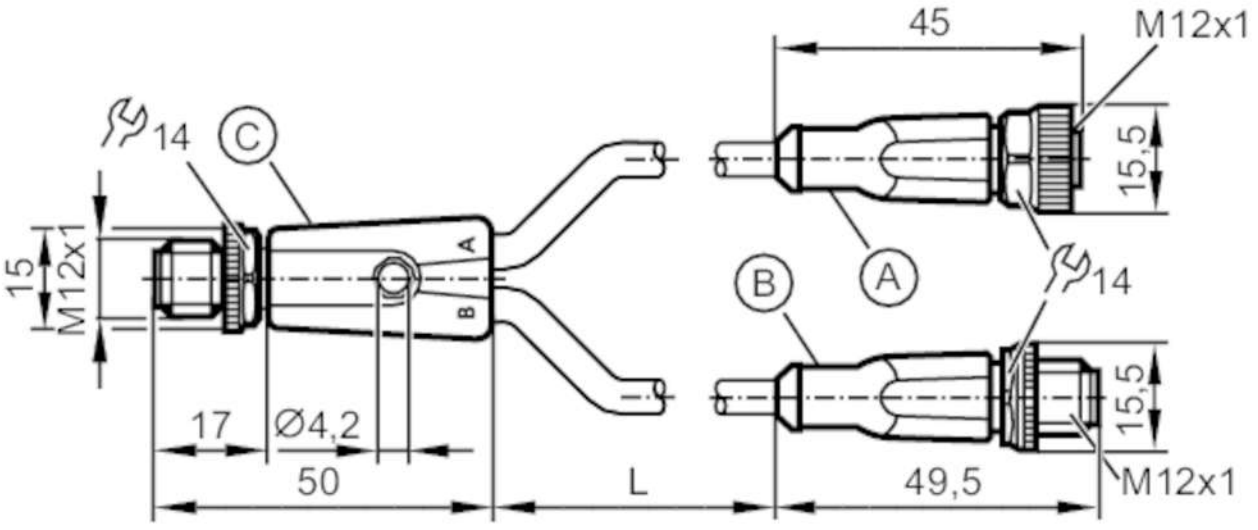

Application		
Special feature		Free from silicone; Halogen-free; Gold-plated contacts; Drag chain suitability
Free from silicone		yes
Electrical data		
Operating voltage	[V]	< 24 DC
Protection class		III
Max. current load total	[A]	4
Operating conditions		
Ambient temperature	[°C]	-25...90
Protection		IP 65; IP 67; IP 68; IP 69K
Mechanical data		
Weight	[g]	172.8
Moulded-body material		TPU / TPU
Material nut		brass, nickel-plated
Sealing material		FKM
Connector type		M12
Drag chain suitability		yes
Drag chain suitability	bending radius for flexible use	min. 10 x cable diameter
	travel speed	max. 3.3 m/s for a horizontal travel length of 5 m and max. acceleration of 5 m/s²
	bending cycles	> 5 Mio.
	torsional strain	± 180 °/m

EVC694

Y connection cable

YDSGHDA0MSS0002HDASTGH030MSS

Remarks

Notes	Please see the technical note under "Downloads"
Pack quantity	1 pcs.

Electrical connection - plug C

Connector: M12, straight; coding: A; Moulded body: TPU, orange; Locking: Lock nut, brass, nickel-plated; Contacts: gold-plated; Tightening torque: 0.6...1.5 Nm; Take into account the maximum value of the counterpart!



Electrical connection

Connection

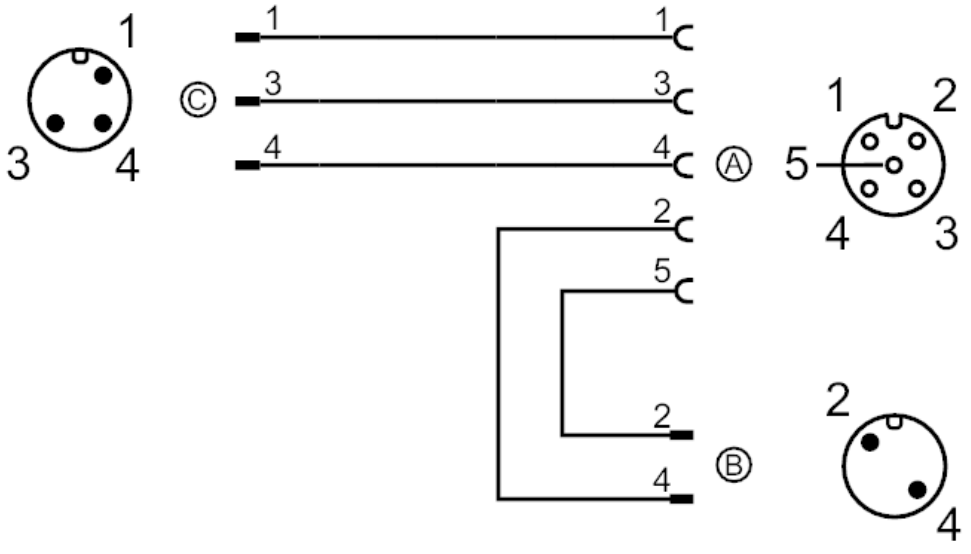

EVC694

Y connection cable

YDSGHDA0MSS0002HDASTGH030MSS

Electrical connection - socket A

Cable: 2 m, PUR, Halogen-free, black, Ø 4.9 mm; 5 x 0.34 mm² (42 x Ø 0.1 mm)

Connector: M12, straight; Moulded body: TPU, orange; Locking: Lock nut, brass, nickel-plated; Sealing: FKM; Contacts: gold-plated; Tightening torque: 0.6...1.5 Nm; Take into account the maximum value of the counterpart!



Electrical connection - plug B

Cable: 2 m, PUR, Halogen-free, black, Ø 4.9 mm; 2 x 0.34 mm² (42 x Ø 0.1 mm)

Connector: M12, straight; coding: A; Moulded body: TPU, orange; Locking: Lock nut, brass, nickel-plated; Contacts: gold-plated; Tightening torque: 0.6...1.5 Nm; Take into account the maximum value of the counterpart!



Diagrams and graphs

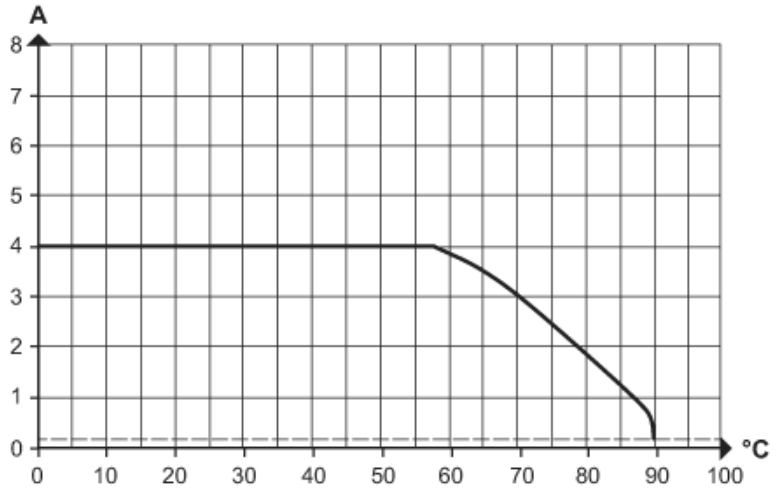

Derating Imax * 0.8 DIN EN 60512-5-2

X Ambient temperature [°C]

Y Current [A]