Please leave these instructions with the user

HR100RS

Mini Air Handling Unit –

for Ducted Ventilation with Heat Recovery

Vent-Axia.

Clean Air Systems

Installation and Servicing Instructions

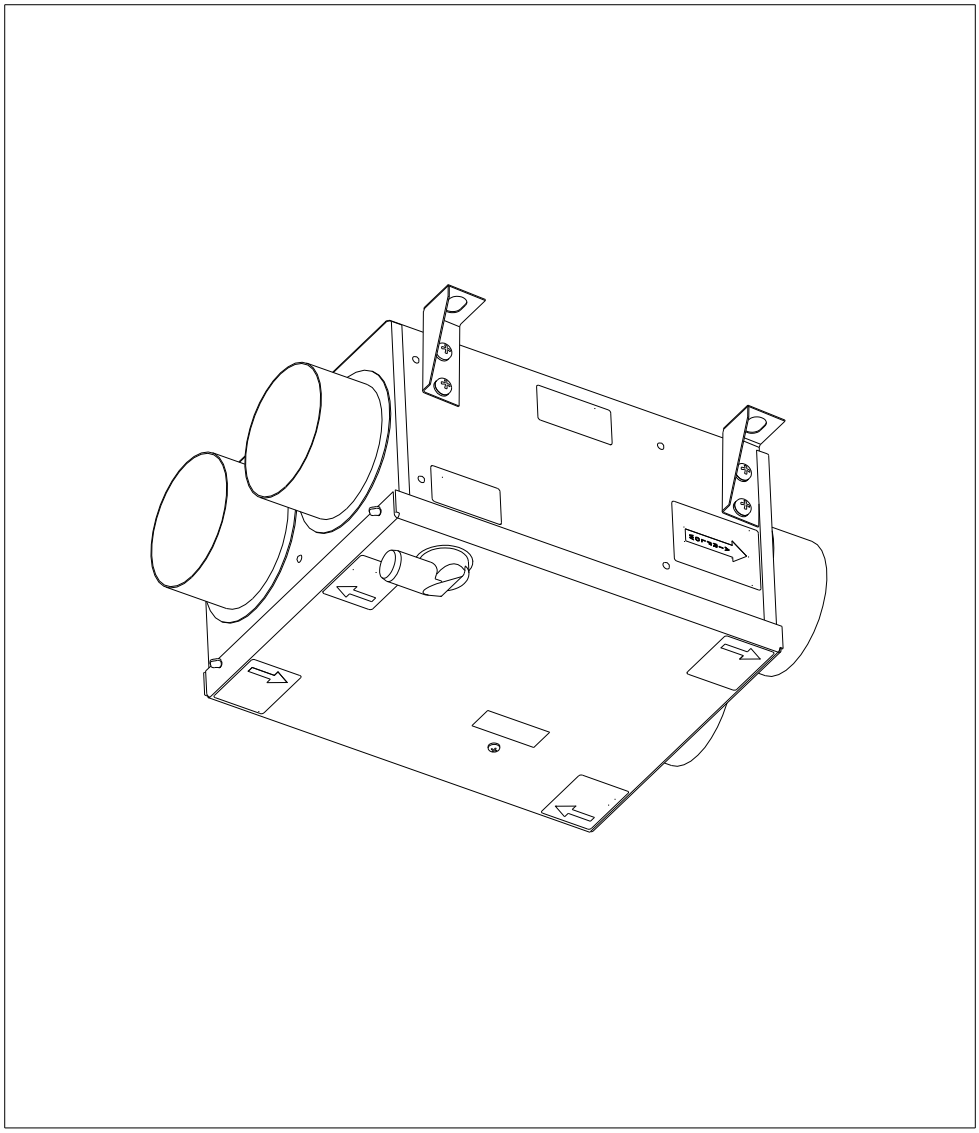

Contents

Section		Page
1.0	Introduction	3
2.0	Site requirements	4
3.0	Installation	5
4.0	Electrical	8
5.0	Commissioning	9
6.0	Maintenance	10

1.0 Introduction

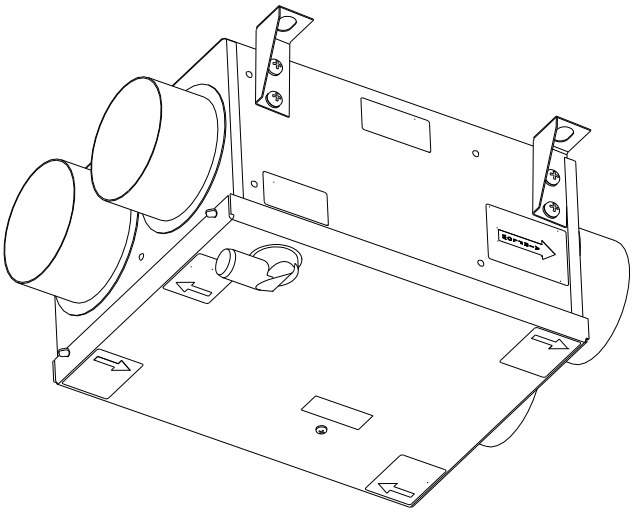

1.1 Description

The Vent-Axia HR 100RS is a remotely mounted unit that will provide balanced ventilation with up to 70% heat recovery in applications where there is no immediate access to an external wall. The HR 100RS is ideal for installations involving internal bathrooms and meets building regulation requirements for this application.

A two speed motor provides for constant low rate ventilation with a boost speed option. Fresh pre-warmed air from the outside is continually provided to the room with simultaneous extraction of stale air and smells. Heat is transferred from outgoing air to the fresh air supply with zero cross contamination, maintaining internal temperatures and providing a fresh environment.

2.0 Site requirements

2.1 Information

1. The unit must be sited and connected by a suitably qualified person and be in accordance with current UK Building Regulations and IEE Wiring Regulations (BS 7671)

2. The unit is intended for permanent connection to the mains electrical supply.

3. The HR100RS is intended for fixed wiring installation.

4. Ensure that the mains electrical supply is compatible with the rating label on the product.

5. The unit must be sited away from direct sources of heat in excess of 40 deg C.

6. Do not site the ceiling diffusers in the vicinity of excessive levels of airborne oil or grease.

7. If the ceiling diffusers are installed in a room containing a fuel burning appliance, the installer must ensure that air replacement is adequate for both appliances.

8. The external grilles must be sited a minimum of 500mm away from the flue of gas or open fire appliances. This to avoid back flow of gases entering the room.

9. All safety regulations and requirements must be strictly followed to prevent hazards to life and property both during and after installation and during subsequent maintenance or servicing.

10. Ensure the mains electrical supply is isolated before commencing installation or maintenance.

3.0 Installation

3.1 Installing the unit

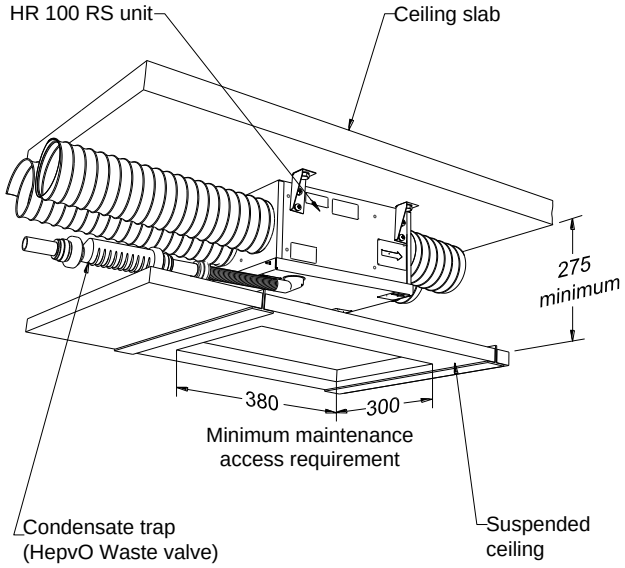

1. Check that all the components have been delivered, as identified in the delivery note. Notify the supplier of any errors or omissions immediately.

2. Check the diagrammatic ducting layout drawing to ensure that the proposed duct routes, fan unit and air terminal locations can be accommodated. If in doubt, refer to the Technical Support Department.

3. The unit is designed to be mounted horizontally. After noting the positions of the electrical connector, duct spigots and suitable installation site for the unit. The drainage connection for the unit, choose a most desirable location for the unit is normally within the ceiling void.

4. Never locate the unit above a sleeping area. The most suitable position is normally above the landing or bathroom. The selected site must allow adequate space around the unit for the removal of the cover and heat exchanger for maintenance and servicing purposes.

5. The unit is attached to the ceiling slab with suitable fixings at four positions. Drainage slope is provided by the set of the fixing brackets

6. The unit must be positioned so that the condensate outlet will accommodate a trap (Hep vO waste valve) and the condensate conveyed properly with a continuous gradient to a suitable positioned down pipe.

7. Connect the drainage system as appropriate using PVC pipe work, joined using PVC cement to ensure waterproof joints. Fit a flexible tube adjacent to the unit to allow the cover to be moved clear during maintenance.
Also note that a blocked condensate outlet pipe due to insufficient pipe gradient will quickly lead to water damage

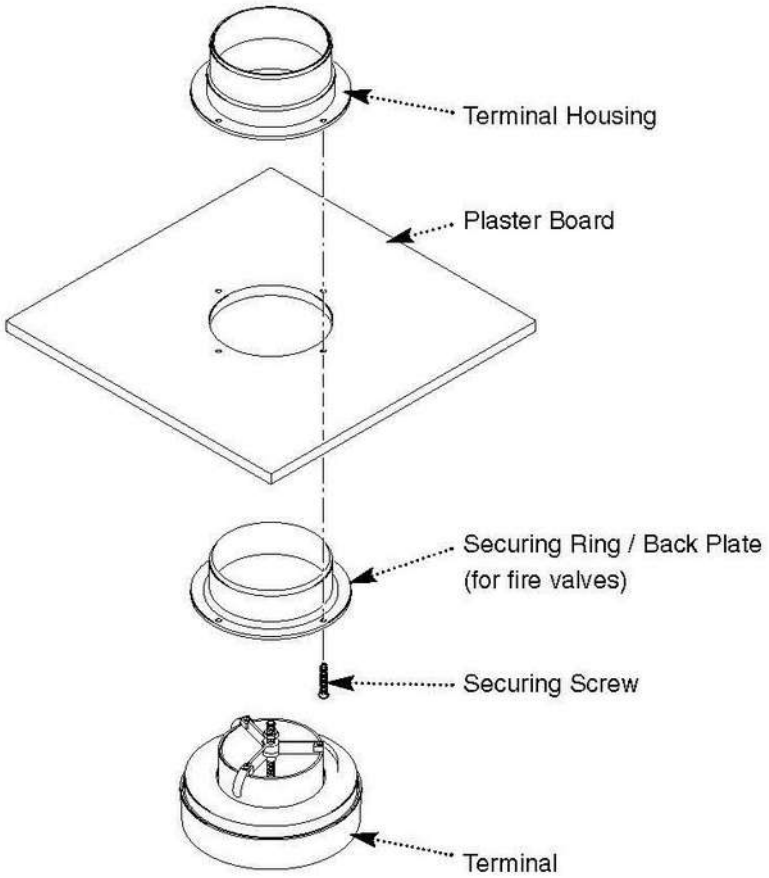

3.0 Installation

3.1 Installing the unit

8. A shell bit is recommended for drilling holes in the ceiling to accommodate the housings for supply and extract air terminals (SV100 and EV100) Make sure that the drilled area is clear of structural members, water and gas pipes or electrical cables and that there is enough clearance behind the ceiling board for duct access and securing ring. Ceiling terminals should preferably be fitted equidistant from adjacent walls, be mindful that coving may be subsequently fitted.

9. Place the terminal housing into the ceiling hole and secure to the back ring with the four screws provided.

10. The external grilles for intake and exhaust air should be positioned so that the exhaust air is not drawn in again.

11. If the grilles are fitted adjacent to each other in the same gable and at the same height then a minimum of 1000mm between grilles is recommended.

12. If the grilles are positioned above one another the distance apart should at least be 1000mm with the exhaust grille at the top.

13. Roof ventilators placed on the same roof surface should be positioned at the same distances as the grilles.

14. Always ensure that all exhaust grilles/roof ventilators are placed higher than the top edge of the highest window and at a distance of at least 1000mm from the nearest window.

15. External grilles placed in the soffit should be positioned at the same distances as indicated for gable application.

3.0 Installation

3.1 Installing the unit

16. Assemble the duct and fittings, following as closely as possible the diagrammatic ducting layout. Ensure that the duct is raised above the ceiling surface to allow for thermal insulation of the ducting.

17. If the ducting runs through unheated areas it will need to be thermally insulated to preclude condensation occurring and to minimise heat loss. This requirement must be observed in the planning and routing of the duct system.

18. The use of flexible ducting should be limited to an absolute minimum. If used it should be fully stretched in order to minimise pressure loss.

19. Attach the unit to the ceiling slab ensuring that the airflow direction arrows on the cover are in the correct orientation for the internal and external vents.

20. Mate up the ducting as appropriate ensuring that the airflow is in line with the directional indicators.

21. Determine the best siting position for the appropriate control. Normally this would either be a manual control switch (NBSW), pull-cord switch (PCSW) humidity switch (HS6) or speed control switch (VCON100)

22. Determine the appropriate wiring connections as outlined within section 4 and wire in accordance with current IEE Wiring regulations ensuring that the mains feed is isolated before making any connections.

Continuous Normal Speed

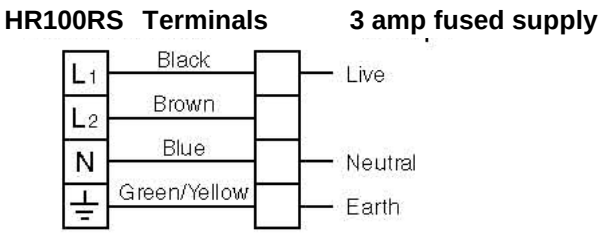

Continuous Boost Speed

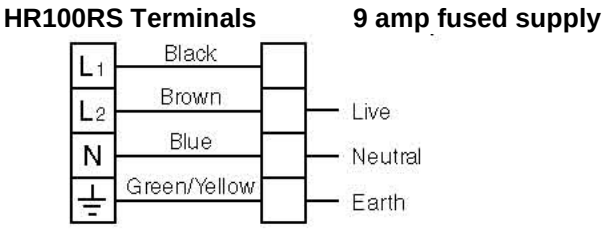

VCON100 : Manual Normal to Boost Speed Switching and ON/OFF Control

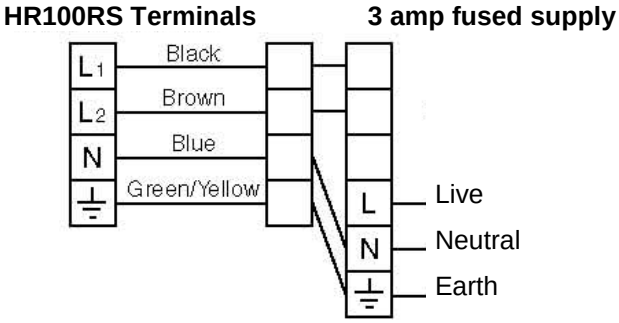

NBSW and PCSW: Manual Normal to Boost Speed Control

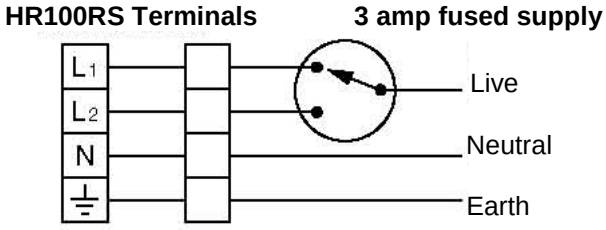

HS6: Automatic Normal to Boost Speed Control

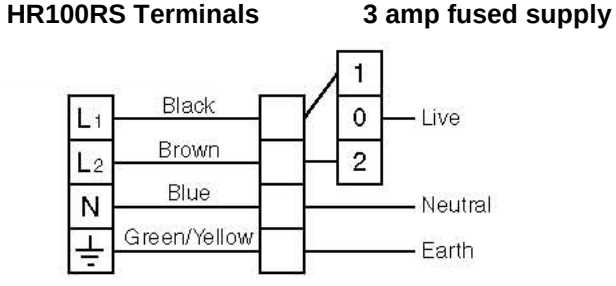

4.0 Electrical

4.1 Electrical Connections

230V 50Hz 12W (normal) 31W (boost)

NOTE: Wiring must be via a 3A fused switched spur with a 3mm contact separation in each pole. The wiring should be suitably (BASEC or HAR) approved cable of appropriate current carrying capacity.

For units switching to boost on operation of a light switch, an in-line timer (order code TIM2) should be wired into the circuit as shown below.

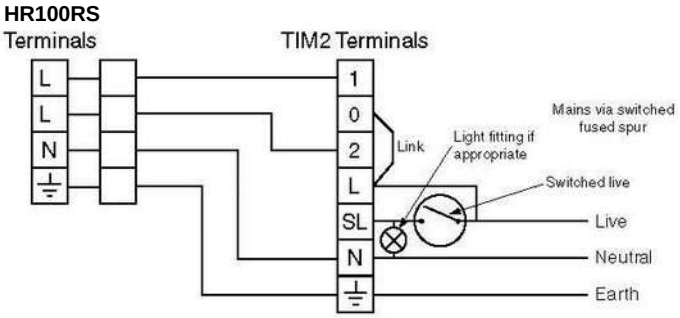

Automatic control

The HR100RS unit operates on continuous trickle ventilation. Operation of switch turns unit to boost ventilation. When switch is turned off units continue to operate on boost for a preset period – adjustable 2-30 minutes

The HR100RS **MUST NOT** be wired in conjunction with a light switch, units will fail.

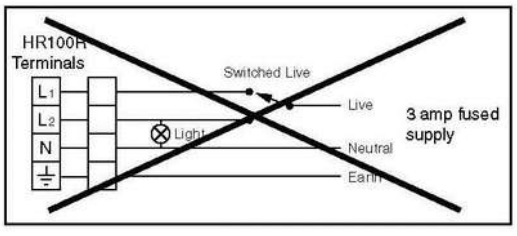

5.0 Commissioning

5.1 Commissioning the System

Before starting to commission the system check the following:-
a) All ducting is in place and secured
b) The wiring is secure and correctly connected.
c) The trap valve is in a position to enable efficient removal of condensate.
d) The unit is mounted appropriately in a position not susceptible to movement or damage.

The scope of the commissioning procedure comprises:-

1) Balancing the two airflows to achieve maximum heat exchanger efficiency.

2) Adjusting the two airflows to obtain the overall airflow rates and the individual terminal air flow rates as specified on the air change schedule.

3) An airflow meter must be used to set the correct airflows.

NOTE:- The supply air terminal device is directional and incorporates a deflector plate. Ensure that the deflector is correctly positioned so that the active part of the terminal device is discharging to the room.

4) Set the control switch (NBSW or PCSW) to normal speed or set the humidistat (HS6) at maximum and check that air is flowing in the correct direction at each terminal point.

5) Standard ceiling terminals type EV100 and SV100 are adjusted by turning the central screw they are locked in the ‘set’ position by the locknut.

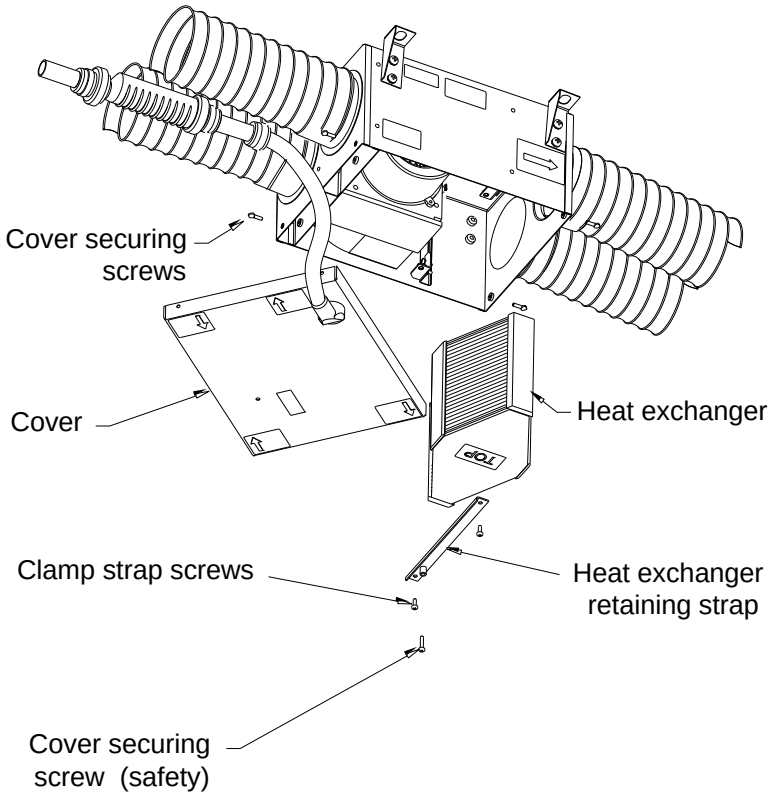

6.0 Maintenance

6.1 Cleaning the Unit

In addition to removing odours, providing fresh air and removing heat, this unit extracts airborne impurities such as dust, dirt and grease. These gradually build up and detract from the efficiency and appearance of the unit.

To ensure optimum performance, the unit should be cleaned at least every six months or at periods determined by the level contamination experienced, and in accordance with the following procedure.

1) Isolate the mains power supply.

2) Remove the four cover securing thumb screws then remove the centre safety screw.

3). Remove the cover and move clear to the side.

4) Remove the two strap securing screws.

5) Remove the strap holding the heat exchanger.

6) Remove the heat exchanger from the unit.

7) Wash the heat exchanger in warm water using a mild detergent and dry thoroughly. Keep water away from all electrical components and wiring within the unit. If the filter cannot be cleaned, replacement is recommended.

8) Reassemble in reverse order. The heat exchanger should be repositioned with ‘TOP’ label visible

PRODUCT FICHE

For Residential Ventilation Units (Complying Commission Delegated Regulation (EU) No 1254/2014)

Name:	Vent-Axia	Vent-Axia
Model ID (Stock Ref.) :	HR 100 RS – 435004 LDC	HR 100 RS – 435004 CDC
SEC Class	B	B
SEC Value ('Average')	-31.99	-26.15
SEC Value ('Warm')	-9.00	-4.20
SEC Value ('Cold')	-72.91	-65.24
Label Required? (Yes/No=Out of scope)	Yes	Yes
Declared as: RVU or NRVU/UVU or BVU	RVU/BVU	RVU/BVU
Speed Drive	2-Speed	2-Speed
Type HRS (Recuperative, Regenerative, None)	Recuperative	Recuperative
Thermal Eff: [(%), NA(if none)]	70	70
Max. Flow Rate (m3/h)	49.0	49.0
Max. Power Input (W): (@Max.Flow Rate)	23	23
LWA: Sound Power Level (dB)	45.53	45.53
Ref. Flow Rate (m3/s)	0.010	0.010
Ref. Pressure Diff. (Pa)	50	50
SPI [W/(m3/h)]	0.55	0.55
Control Factor & Control Typology: (CTRL/ Typology)		
Control Factor; CTRL	0.65	0.85
Control Typology	Local Demand Control	Central Demand Control
Declared: -Max Internal & External Leakage Rates(%) for BVUs or carry over (for regenerative heat exchangers only), -&Ext. Leakage Rates (%) for Ducted UVUs;	<5% Internal, <5% External	<5% Internal, <5% External
Mixing Rate of Non-Ducted BVUs not intended to be equipped with one duct connection on either supply or extract air side;	N/A	N/A
Position and description of visual filter warning for RVUs intended for use with filters, including text pointing out the importance of regular filter changes for performance and energy efficiency of the unit	N/A	N/A
For UVUs (Instructions Install Regulated Supply/Extract Grilles Façade)	N/A	N/A
Internet Address (for Disassembly Instructions)	www.vent-axia.com	www.vent-axia.com
Sensitivity p. Variation@+20/-20 Pa: (for Non-Ducted VUs)	N./A	N./A
Air Tightness-ID/OD-(m3/h) (for Non-Ducted VUs)	N./A	N./A
Annual Electricity Consumption: AEC (kWh/a)	4.59	6.16
Annual Heating Saved: AHS (kWh/a)		
AHS: Average	42.79	40.88
AHS: Warm	19.35	18.49
AHS: Cold	83.71	79.98

The Vent-Axia Guarantee

Applicable only to products installed and used in the United Kingdom. For details of the Guarantee outside of the United Kingdom contact your local supplier.

Vent-Axia guarantees this product for two years from the date of purchase against faulty material or workmanship. In the event of any part being found to be defective, the product will be repaired, or at the Company's discretion the product will be replaced without charge, provided that the product:

1). Has been installed and used in accordance with the instruction given with each unit.
2). The electricity supply complies with the rating label.
3). Has not been misused, neglected or damaged.
4). Has not been modified or repaired by any person not authorized to do so by Vent-Axia.

If claiming under terms of guarantee

Please return the complete product, carriage paid to your original supplier or nearest Vent-Axia centre, by post or personal visit. Please ensure that it is adequately packed and accompanied by a letter clearly marked "Guarantee claim" stating the nature of the fault and providing evidence of date and source of purchase.

The guarantee is offered to you as an extra benefit, and does not affect your legal rights

As part of the policy of continuous product improvement
Vent-Axia reserve the right to alter specifications without notice

Vent-Axia
Clean Air Systems

Vent-Axia Ltd
Fleming Way
Crawley
West sussex
RH10 9YX
www.vent-axia.com