efector200

ifm electronic

Photoelectric sensors

O5H200

O5H-HPKG/US
Diffuse reflection sensor
Rectangular plastic
Plug and socket

Background suppression
with pot.

Range 50...1400mm
(Range referred to white paper 200 x 200 mm, 90 % remission)
adjustable

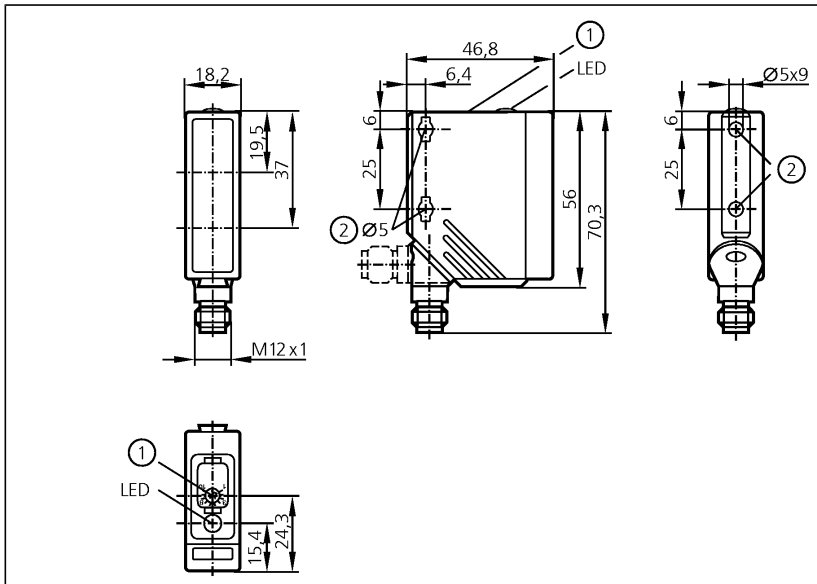

1: with pot.
2: When a M5 mounting screw is used, the max. tightening torque is 2 Nm.

Receiver in upper lens, transmitter in lower lens

CE cULus LISTED

Electrical design		DC PNP
Output		light-on mode
Range	[mm]	
Object white (90 % remission)		50...1400
Object grey (18 % remission)		50...800
Object black (6 % remission)		50...550
Light spot diameter	[mm]	50 (Range 1000 mm)
Operating voltage	[V]	10...36 DC
Current rating	[mA]	200
Short-circuit protection		pulsed
Reverse polarity protection		yes
Overload protection		yes
Voltage drop	[V]	< 2.5
Current consumption	[mA]	25
Switching frequency	[Hz]	1000
Type of light		Red light 624 nm
Operating temperature	[°C]	-25...60
Protection		IP 65, II
EMC		EN 60947-5-2
Housing material		housing: PA; bezel: high-grade stainless steel; operator interface: TPE
Material lens		PMMA
Function display		
Switching status	LED	yellow
Connection		M12 connector
Remarks		cULus - Class 2 source required

O5H200

Wiring



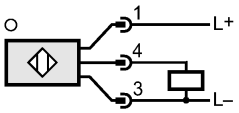

Accuracy graph

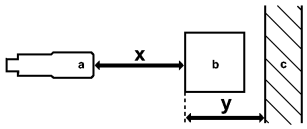

a: sensor
b: object
c: background
x: distance sensor / object
y: min. distance object / background

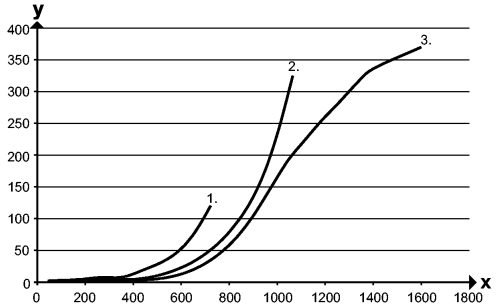

Values in [mm]
1 = object black (6 % remission), background white (90 % remission)
2 = object grey (18 % remission), background white (90 % remission)
3 = object white (90 % remission), background white (90 % remission)