N7R22A

Inductive NAMUR ring sensor

I7R2015-N /1G/1D

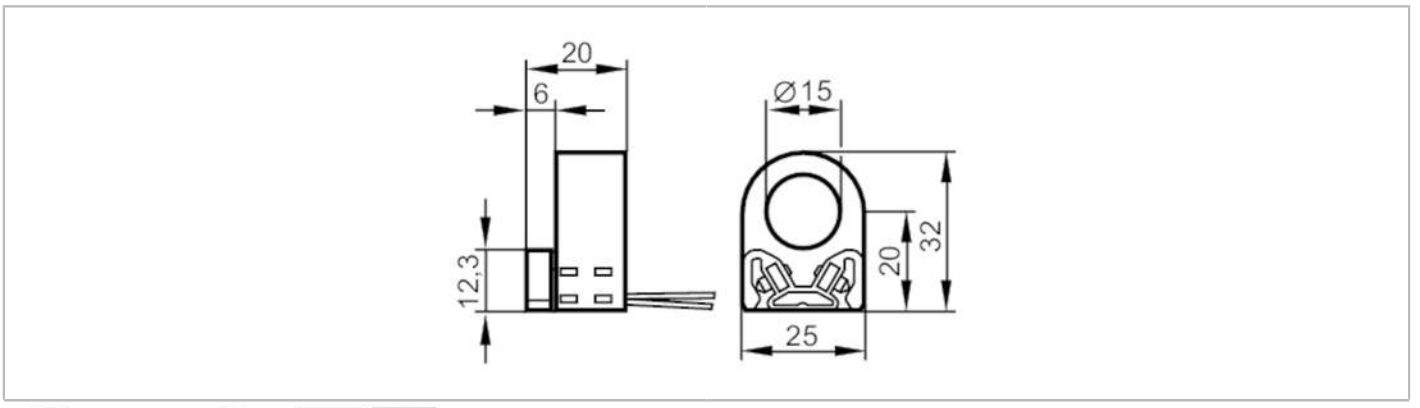

Product characteristics		
Electrical design		NAMUR
Output function		normally closed
Housing		circular
Dimensions	[mm]	32 x 25 x 20
Electrical data		
Connection to switching amplifiers		yes
Switching amplifiers		connection to certified intrinsically safe circuits with the max. values: U = 15 V / I = 50 mA / P = 120 mW
Nominal voltage DC	[V]	8.2; (1kΩ)
Current consumption	[mA]	< 1.2; (disabled; conductive: > 2,1)
Protection class		III
Outputs		
Electrical design		NAMUR
Output function		normally closed
Detection zone		
Measuring ball (diameter)	[mm]	6
Max. travel speed	[m/s]	25
Accuracy / deviations		
Hysteresis	[mm]	1
Operating conditions		
Ambient temperature	[°C]	-40...100
Note on ambient temperature		max. temperature span: 100 K
Protection		IP 67
Tests / approvals		
Approval		BVS 08 ATEX E026; IECEx BVS 09.0016
ATEX marking		II 1G Ex ia IIC T4 Ga
		II 1D Ex ia IIIC T125°C Da
EMC		EN 60947-5-2
MTTF	[years]	3318

N7R22A

Inductive NAMUR ring sensor

I7R2015-N /1G/1D

Safety classification		
Max. internal capacitance	[nF]	150
Max. internal inductance	[µH]	100
Mechanical data		
Weight	[g]	46.8
Housing		circular
Dimensions	[mm]	32 x 25 x 20
Inside diameter	[mm]	15
Materials		PA 12-GF30
Remarks		
Pack quantity		1 pcs.
Electrical connection		

Cable: 0.15 m; 2 x 0.14 mm², PTFE

Connection

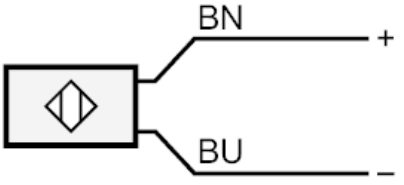

	Core colours :
BN =	brown
BU =	blue