

# LED continuously light , green 230V

**Part no.** SL7-L230-G
**Article no.** 171474

**Catalog No.** SL7-L230-G

Powering Business Worldwide

## Delivery programme

| | | | |
|---|---|---|---|
| Product range | | | SL7 signal towers |
| Basic function | | | Card with LED |
| Protection type | | | IP66 |
| Rated operational voltage | $U_e$ | V | 230/240 V AC |
| Type of light | | | Continuous light |
| Light elements | | | LED |
| Colour | | | |
| | | | green |
| | | |  |
| Function | | | 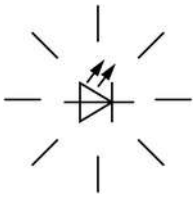 |
| Connection to SmartWire-DT | | | no |

## Approvals

| | |
|---|---|
| Product Standards | IEC/EN 60947-5-1; UL 508; CSA-C22.2 No. 14-10; CSA-C22.2 No. 94-91; CE marking |
| UL File No. | E29184 |
| UL Category Control No. | NKCR |
| CSA File No. | UL report applies to both US and Canada |
| CSA Class No. | NKCR7 |
| North America Certification | UL listed, certified by UL for use in Canada |
| Degree of Protection | UL Type 4, 4X, 13 |

## General

| | | | |
|---|---|---|---|
| Standards | | | IEC/EN 60947-5-1 |
| Climatic proofing | | | Damp heat, constant, to IEC 60068-2-78<br>Damp heat, cyclic, to IEC 60069-2-30 |
| Mounting position | | | As required |
| Mechanical shock resistance | | g | > 15<br>according to IEC 60068-2-27<br>Shock duration 11 ms<br>Sinusoidal |
| IEC degree of protection | | | IP66<br>IEC/EN 60529 |
| Protection type UL | | | Type 4, 4X, 13 |
| Material | | | Enclosure: Polycarbonate (PC), black<br>Cap: Polycarbonate (PC) |
| Cap colour | | | |
| | | | green |
| Ambient temperature | | °C | -30 - +60 |
| Number of signal elements | | | Max. 5 with standard base<br>Max. 10 with base for mounting on both sides |
| Weight | | g | 80 |

## Contacts

| | | | |
|---|---|---|---|
| Rated impulse withstand voltage | $U_{imp}$ | V AC | 4000 |
| Rated insulation voltage | $U_i$ | V | 250 |
| Overvoltage category/pollution degree | | | III/3 |

## modules

| | | | |
|---|---|---|---|
| Type of light | | | Continuous light |
| Light elements | | | LED |
| Leakage current | | A | < 0.003 |
| lifespan | | h | > 100000 |
| Transmission angle | | | 360° |
| Current-/power consumption | | | |
| 230 /240V AC | | A | 0.027 - 0.028 |
| Voltage levels | | | 230/240 V AC ± 10 % |

## Technical data ETIM 5.0

| | | | |
|---|---|---|---|
| Low-voltage industrial components (EG000017) / Optical module for signal tower (EC000232) | | | |
| Electric engineering, automation, process control engineering / Low-voltage switch technology / Command and alarm device / Optical module for signal tower (ecl@ss8-27-37-12-20 [AKF038010]) | | | |
| Function | | | Continuous light |
| Colour | | | Green |
| Outer diameter | | mm | 73 |
| Degree of protection (IP) | | | IP66 |
| Operating voltage at AC 50 Hz | | V | 110 - 120 |
| Operating voltage at AC 60 Hz | | V | 110 - 120 |
| Operating voltage at DC | | V | 0 - 0 |
| Voltage type | | | AC |
| Type of lamp | | | LED |
| Colour housing | | | Black |

## Dimensions

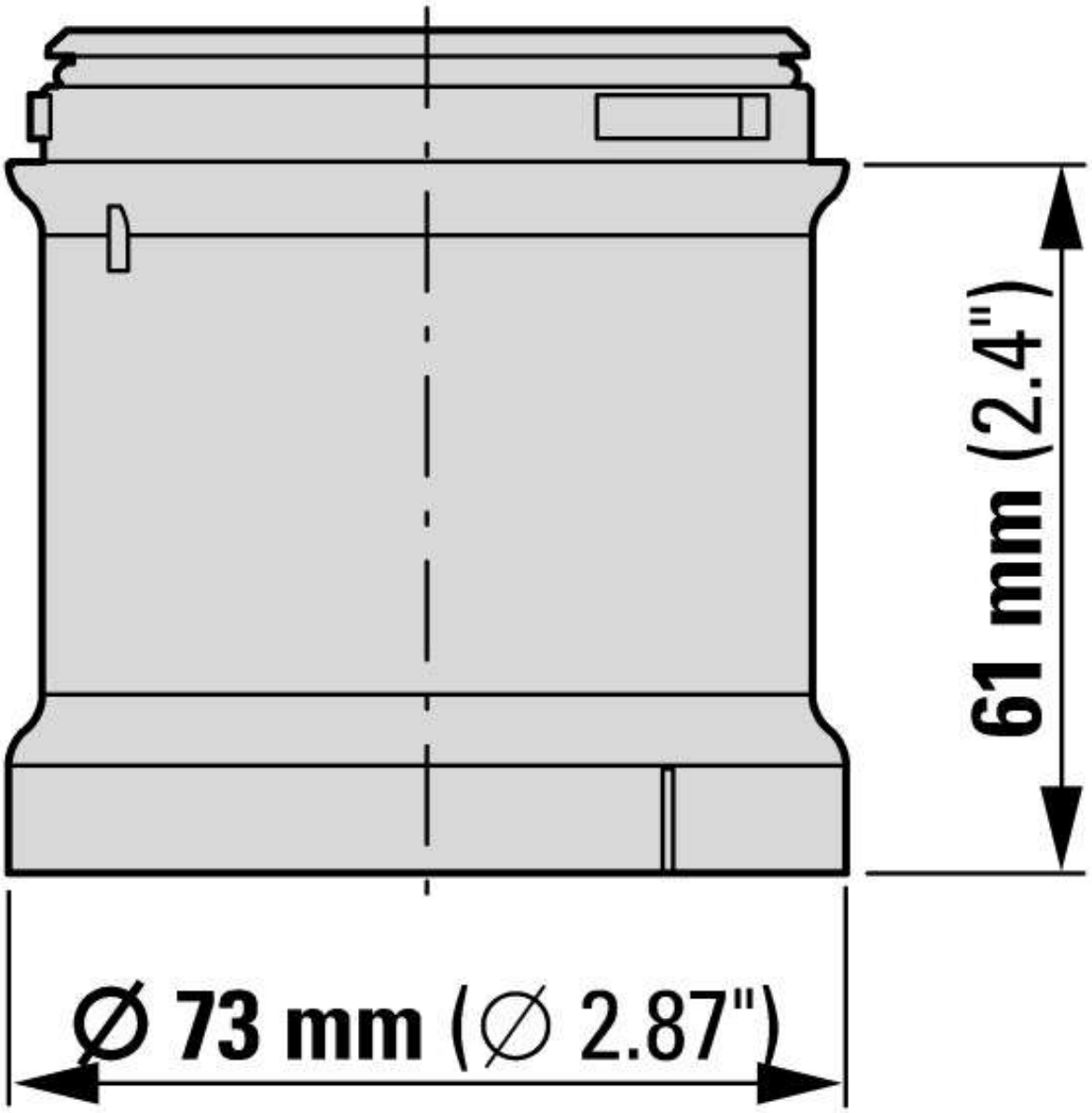


## Additional product information (links)

| IL047004ZU SL7 Light Modules, Tone Modules | |
|---|---|
| IL047004ZU SL7 Light Modules, Tone Modules | ftp://ftp.moeller.net/DOCUMENTATION/AWA_INSTRUCTIONS/IL047004ZU2013_02.pdf |
| IL047004ZU SL7, modules lumineux, modules sonores | ftp://ftp.moeller.net/DOCUMENTATION/AWA_INSTRUCTIONS/IL047004ZU2013_02.pdf |


© 07/2014 by Eaton Industries GmbH