E70451

Connecting cable with socket

Edge-Gateway/Power cable

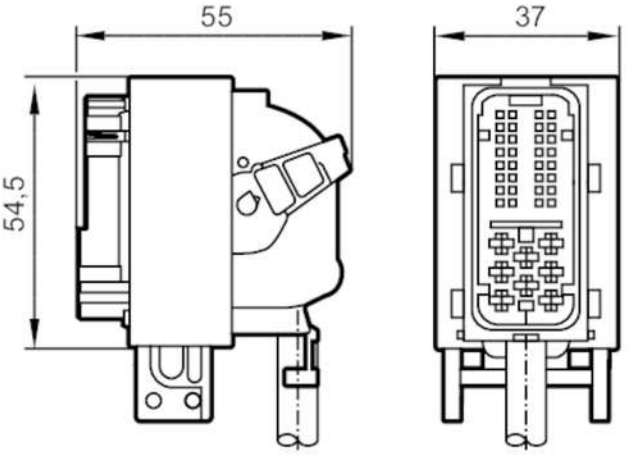

Application		
Application		voltage supply for edgeGateway
Electrical data		
Operating voltage	[V]	8...32 DC
Operating conditions		
Ambient temperature	[°C]	-30...85
Protection		IP 65
Mechanical data		
Weight	[g]	236
Materials		PBT-GF20
Remarks		
Pack quantity		1 pcs.

E70451

Connecting cable with socket

Edge-Gateway/Power cable

Electrical connection

Cable: 5 m, PVC; FLRY-B; 0.75 mm²

Connection

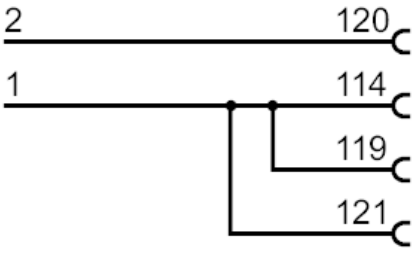

1	+ 24 V
2	GND