

Image may differ from product. See technical specification for details.

FYNT 60 F

Triangular flanged roller bearing unit with SKF ConCentra locking, metric series

Triangular flanged roller bearing units consist of a spherical roller bearing mounted in a cast iron housing that can be bolted to a machine wall. They are robust, ready-to-mount units that are assembled, lubricated and sealed at the factory for maximum service life. The

simple installation, easy alignment and reliable locking technology of SKF ConCentra units contribute to a smooth operation.

- Ready to mount
- Factory lubricated and sealed
- Long service life
- Minimal maintenance

Overview

Dimensions

Shaft diameter	60 mm
Housing overall width	78 mm
Width, total	78.7 mm
Attachment bolt diameter	12 mm
Pitch diameter of bolt holes of round and triangle flange type housing	190 mm
Bearing width, total	70 mm

Performance

Basic dynamic load rating	156 kN
Basic static load rating	166 kN
Limiting speed	2 900 r/min

Properties

Housing type	Flanged
Flanged housing type	Triangular
Number of bolt holes for fasteners	3
Bearing insert	Spherical roller bearing
Retaining feature, inner ring	SKF ConCentra
Bearing position	Locating
Bore type	Cylindrical
Material, housing	Cast iron
Material, bearing	Bearing steel
Coating	Without
Bearing housing seal type	Radial lip seal
Sealing, unit	Optional end cover
Lubricant	Grease
Relubrication hole	With
Grease fitting	With

Logistics

Product net weight	6.7 kg

eClass code	23-05-16-90
UNSPSC code	31171537

Technical specification

Metric/inch series	Metric
Bearing insert	Spherical roller bearing
Bearing position	Locating
Locking method	SKF ConCentra
Bearing housing seal type	Radial lip seal

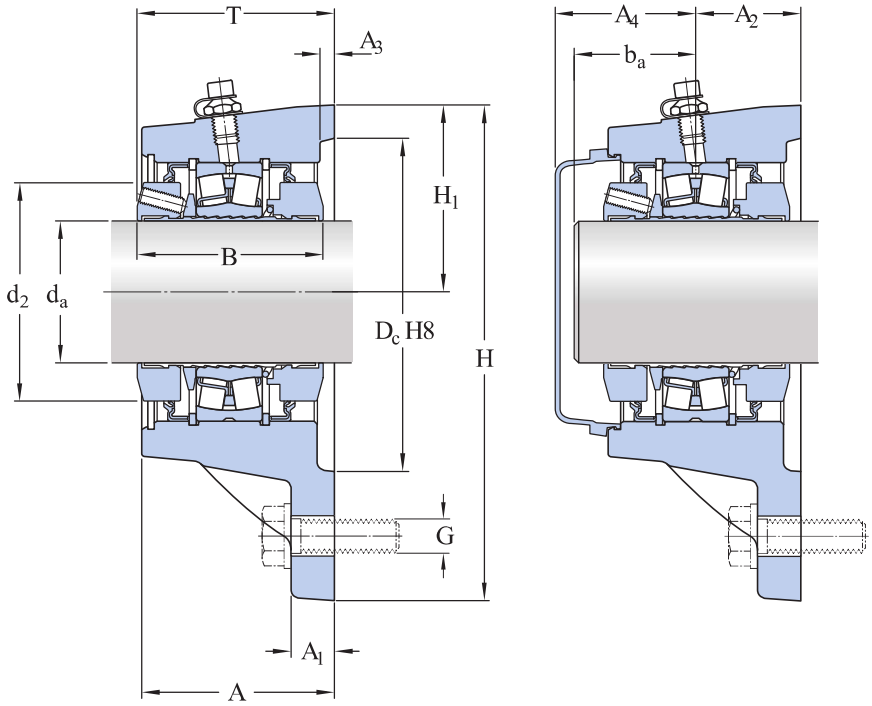

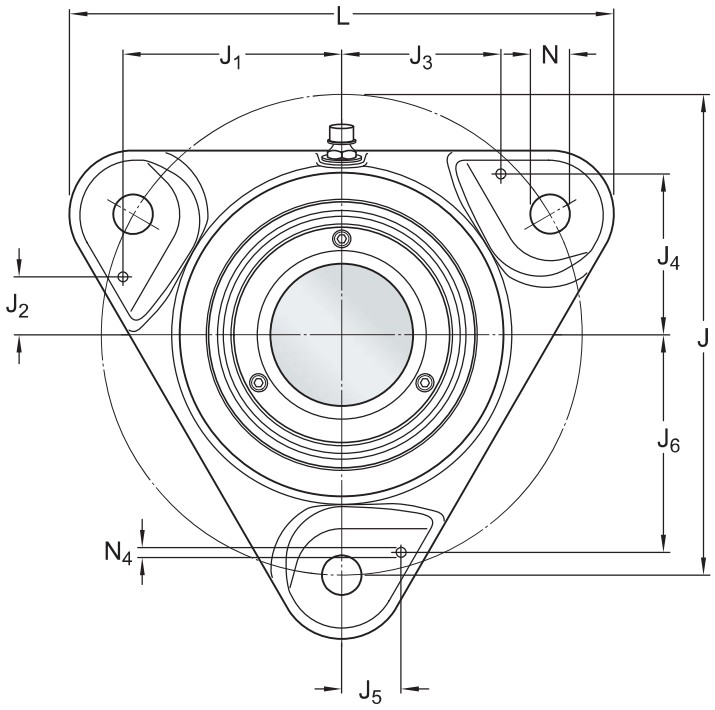

Dimensions

d_a	60 mm	Shaft diameter
d_2	86 mm	Collar outer diameter
A	78 mm	Housing width
A_1	15 mm	Flange thickness
A_2	41.6 mm	Machined face to centre line bearing
A_3	5 mm	Centring bore depth
B	70 mm	Inner ring width
D_c	130 mm	Centring bore diameter
H	202.5 mm	Triangular height
H_1	77.5 mm	Height triangular base to center
J	190 mm	Distance of attachment bolts
L	225 mm	Housing length
N	14 mm	Bolt hole diameter
T	78.7 mm	Total width

SHAFT END

A_4	73 mm	Distance bearing centre line to end cover
b_a	max. 65 mm	Distance bearing centre line to shaft end
b_a	min. 38 mm	Distance bearing centre line to shaft end

DOWEL PINS

J_1	90 mm	Distance dowel pins
J_2	24 mm	Distance dowel pins
J_3	66 mm	Distance dowel pins
J_4	59.5 mm	Distance dowel pins
J_5	24 mm	Distance dowel pins
J_6	90 mm	Distance dowel pins
N_4	max. 8 mm	Pin hole diameter

Calculation data

Basic dynamic load rating	C	156 kN
Basic static load rating	C_0	166 kN
Fatigue load limit	P_u	18.6 kN
Limiting speed		2 900 r/min
Limiting value	e	0.24
Calculation factor	Y_1	2.8
Calculation factor	Y_2	4.2
Calculation factor	Y_0	2.8
Bearing mean diameter	d_m	85 mm
Axial holding force of the locking mechanism	P_a	15 kN

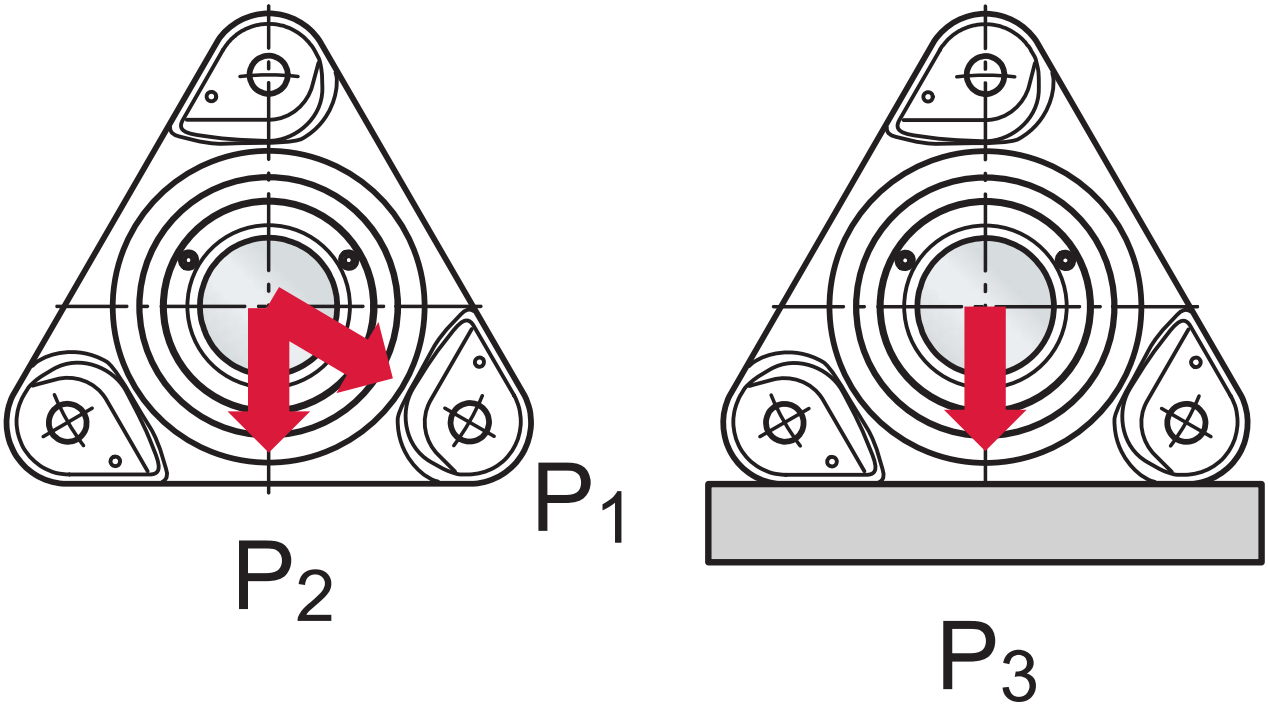

Breaking loads

P_1	130 kN	Breaking load
P_2	110 kN	Breaking load
P_3	190 kN	Breaking load

Mounting information

Attachment bolt diameter	G	12 mm
Tightening torque for attachment bolts		80 N·m
Set screws		M6
Number of set screws		3
Tightening torque for set screws		8 N·m
Grease quantity for relubrication		6 g

Compatible products

Recommended product

End cover for bearing units	ECY 212

More Information

Product details

- Flanged units - metric series
- Flanged units - inch series
- Permissible misalignment
- Locating / non-locating support
- Loads
- Temperature limits
- Page details - Permissible speed
- Lubrication
- Mounting and dismounting
- Condition monitoring
- Associated products
- Ordering information
- Designation system

Engineering information

- Principles of selecting mounted bearing solutions
- Bearing failure and how to prevent it

Tools

- SKF Product select

Terms of use

By accessing and using this website / app owned and published by AB SKF (publ.) (556007-3495 · Gothenburg) (“SKF”), you agree to the following terms and conditions:

Warranty Disclaimer and Limitation of Liability

Although every care has been taken to assure the accuracy of the information on this website / app, SKF provides this information "AS IS" and DISCLAIMS ALL WARRANTIES, EXPRESS OR IMPLIED, INCLUDING, BUT NOT LIMITED TO, IMPLIED WARRANTIES OF MERCHANTABILITY AND FITNESS FOR A PARTICULAR PURPOSE. You acknowledge that your use of this website / app is at your sole risk, that you assume full responsibility for all costs associated with use of this website / app, and that SKF shall not be liable for any direct, incidental, consequential, or indirect damages of any kind arising out of your access to, or use of the information or software made available on this website / app.

Any warranties and representations in this website / app for SKF products or services that you purchase or use will be subject to the agreed upon terms and conditions in the contract for such product or service.

Further, for non-SKF websites / apps that are referenced in our website / app or where a hyperlink appears, SKF makes no warranties concerning the accuracy or reliability of the information in these websites / apps and assumes no responsibility for material created or published by third parties contained therein. In addition, SKF does not warrant that this website / app or these other linked websites / apps are free from viruses or other harmful elements.

Third Party Services

When viewing YouTube content via the SKF website(s) (i.e. using YouTube API Services), you agree to be bound by the YouTube Terms of Service.

Copyright

Copyright in this website / app copyright of the information and software made available on this website / app rest with SKF or its licensors. All rights are reserved. All licensed material will reference the licensor that has granted SKF the right to use the material. The information and software made available on this website / app may not be reproduced, duplicated, copied, transferred, distributed, stored, modified, downloaded or otherwise exploited for any commercial use without the prior written approval of SKF. However, it may be reproduced, stored and downloaded for use by individuals without prior written approval of SKF. Under no circumstances may this information or software be supplied to third parties.

This website /app includes certain images used under license from Shutterstock, Inc.

Trademarks and Patents

All trademarks, brand names, and corporate logos displayed on the website / app are the property of SKF or its licensors, and may not be used in any way without prior written approval by SKF. All licensed trademarks published on this website / app reference the licensor that has granted SKF the right to use the trademark. Access to this website / app does not grant to the user any license under any patents owned by or licensed to SKF.

Changes

SKF reserves the right to make changes or additions to this website / app at any time.