INSTRUCTION MANUAL
IS-mA1 Minialarm
Intrinsically Safe Round Sounder



The IS-mA1 sounder is CE marked for compliance with the European Explosive Atmospheres Directive 2014/34/EU and the European EMC Directive 2014/30/EU

1) Introduction

The IS-mA1 minialarm is an ATEX and IECEx certified intrinsically safe sounder which produces a loud warning signal in a hazardous area. Forty-nine first stage alarm sounds can be selected by internal switches and each one can be externally changed to a second or third stage alarm sound. The sounder may be used in all gas groups IIA IIB and IIC.

2) Description

Fig 1 shows a simplified block diagram of an IS-mA1 minialarm sounder. The device operates immediately power is applied to the + and – terminals which are duplicated to allow a second sounder to be connected in parallel, or for an end of line monitoring resistor to be installed. The output tone is defined by the positions of the six internal switches and this tone can be changed to a second or third stage alarm tone by connecting terminals S2 or S3 to 0V. The tone generator is crystal controlled to ensure that when two sounders connected to the same power supply are started at the same time the output tones remain synchronised.

3) Supply Voltage

The IS-mA1 minialarm sounder has been designed to operate in a hazardous area from a 24V dc supply via 28V 93mA resistive ATEX and IECEx certified Zener Barriers or Galvanic Isolators. The sounders may be tested or used in safe areas without a Zener Barrier or Galvanic Isolator, but at supply voltages above 16V the internal current limit will function and therefore it is recommended that they are not operated continuously with a direct supply greater than 16V.

IS-mA1 Sounder

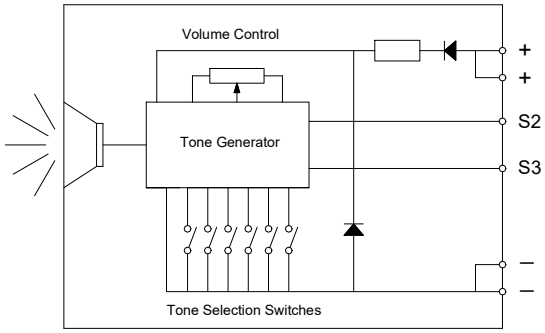

Fig 1 Simplified block diagram

4) Intrinsic Safety Certification

4.1 ATEX certificate

The IS-mA1 minialarm sounder complies with the following standards:-

EN IEC 60079-0:2018
EN60079-11:2012
IEC60079-26:2014

II 1G Ex ia IIC T4 Ga (-40ºC <= Ta <= +60ºC)

The EC-Type Examination Certificate SIRA 05ATEX2084X has been issued by the Notified Body Sira. This confirms compliance with the European ATEX Directive 94/9/EC for Group II, Category 1G equipment. The sounder carries the Community Mark and subject to local codes of practice, may be installed in any of the EEA member countries. This instruction sheet describes installations which conform to EN60079:Part14:2008 Electrical Installation in Hazardous Areas. When designing systems for installation outside the UK, the local Code of Practice should be consulted.

1) The certification marking is as follows:

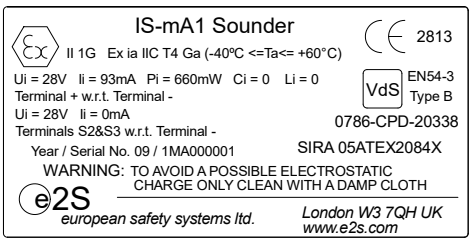

2) The equipment may be used in zones 0, 1 and 2 with flammable gases and vapours with apparatus groups IIA, IIB & IIC and with temperature classes T1, T2, T3 and T4.

3) The equipment is only certified for use in ambient temperatures in the range -40ºC to +60ºC and should not be used outside this range.
4) The certificate number has an 'X' suffix, which indicates that the certificate contains one of more special conditions for safe use. Those installing or inspecting the equipment should refer to this section of the certificate.
5) The equipment has not been assessed as a safety-related device (as referred to by Directive 94/9/EC Annex II, clause 1.5).
6) Installation of this equipment shall be carried out by suitably-trained personnel in accordance with the applicable code of practice.
7) Repair of this equipment shall only be carried out by the manufacturer or in accordance with the applicable code of practice.
8) The certification of this equipment relies on the following materials used in its construction:

Enclosure: ABS Plastic

If the equipment is likely to come into contact with aggressive substances, then it is the responsibility of the user to take suitable precautions that prevent it from being adversely affected, thus ensuring that the type of protection is not compromised.

"Aggressive substances" - e.g. acidic liquids or gases that may attack metals, or solvents that may affect polymeric materials.

"Suitable precautions" - e.g. regular checks as part of routine inspections or establishing from the material's data sheet that it is resistant to specific chemicals.

SPECIAL CONDITIONS FOR SAFE USE (as stated in the EC Type Examination Certificate SIRA 05ATEX2084X)

Conditions for IS-mAI Sounder

The equipment has an ingress protection rating of IP65. However, if it has been supplied without cable entry devices, then the user shall ensure that the devices that are fitted will provide an ingress protection that is appropriate to the environment in which it is installed i.e. IP20 or better. If only one of the two cable entries are used, then the unused entry 'knockout' shall be left intact or fitted with a blanking device that ensures ingress protection appropriate to the environment in which it is installed i.e. IP20 or better.

The total capacitance connected to terminals + wrt - (i.e. the capacitance of the cable plus any other capacitance) shall not exceed 83nF.

The enclosure is non-conducting and may generate an ignition-capable level of electrostatic charges under certain extreme conditions. The user should ensure that the equipment is not installed in a location where it may be subjected to external conditions that might cause a build-up of electrostatic charges on non-conducting surfaces, additionally, cleaning of the equipment should be done only with a damp cloth.

The equipment shall only be supplied via Terminals + w.r.t. Terminals - from a barrier having a maximum open circuit voltage Uo that is $\leq$ 28V and a maximum short circuit current Io that is $\leq$ 93mA, where Io is resistively limited. The barrier shall be ATEX certified by a notified body.

4.2 Zones, Gas Groups and Temperature Classification
The IS-mA1 minialarm sounder has been certified Ex ia IIC T4. When connected to an approved system it may be installed in:

Zone 0	explosive gas air mixture continuously present.
Zone 1	explosive gas air mixture likely to occur in normal operation.
Zone 2	explosive gas air mixture not likely to occur, and if it does, it will only exist for a short time.

Be used with gases in groups:

Group A	propane
Group B	ethylene
Group C	hydrogen

Having a temperature classification of:

T1	450ºC
T2	300ºC
T3	200ºC
T4	135ºC

4.3 Terminals + and -
Power is supplied to the sounder via the + and – terminals which have the following input safety parameters:

Ui	=	28V
Ii	=	93mA
Pi	=	660mW

Ci = 0 Li = 0

The IS-mA1 sounder may be powered from an ATEX certified Zener barrier or galvanic isolator which have output parameters equal to or less than 28V, 93mA and 660mW, where Io is resistively limited. The cable parameters stated on the selected Zener barrier or galvanic isolator certificate must be observed.

Up to three IS-mA1 sounders can be connected in parallel and powered from a common barrier or isolator. Connecting two sounders in parallel will reduce the output from each by about 3dB. Three sounders should only be powered from a common supply when the maximum supply voltage is available.

4.4 Terminals S2 and S3
When terminals S2 or S3 are connected to 0V (- terminal) the sounder output tone changes to the second or third stage alarm respectively. The input safety parameters for these terminals are:

Ui	=	28V
Ii	=	0mA

Because the permitted input current is zero, these terminals may only be connected to a diode return barrier, an intrinsically safe relay or a galvanic isolator, all of which must have been certified by an EC Notified Body. Only diode return barriers with a voltage drop of less than 0.9V may be used. Alternatively, these terminals may be connected directly to a mechanically activated switch within the hazardous area.

Tone Selection – To select the required first stage tone set the tone switches 1 to 6 (see Fig 2) to the tone setting shown in the table below. The table also shows which 2nd and 3rd stage tones are available for use with the selected first stage tone if more than one tone output stage is required.

Tone Number	Tone Description	Switch Settings 1 2 3 4 5 6	Second Stage Alarm	Third Stage alarm
Tone 1	Continuous 340Hz	0 0 0 0 0 0	Tone 2	Tone 5
Tone 2	Alternating 800/1000Hz @ 0.25s intervals	1 0 0 0 0 0	Tone 17	Tone 5
Tone 3	Slow whoop 500/1200Hz @ 0.3Hz with 0.5s gap repeated	0 1 0 0 0 0	Tone 2	Tone 5
Tone 4	Sweeping 500/1000Hz @ 1Hz	1 1 0 0 0 0	Tone 6	Tone 5
Tone 5	Continuous 2400Hz	0 0 1 0 0 0	Tone 3	Tone 20
Tone 6	Sweeping 2400/2900Hz @ 7Hz	1 0 1 0 0 0	Tone 7	Tone 5
Tone 7	Sweeping 2400/2900Hz @ 1Hz	0 1 1 0 0 0	Tone 10	Tone 5
Tone 8	Siren 500/1200/500Hz @ 0.3Hz	1 1 1 0 0 0	Tone 2	Tone 5
Tone 9	Sawtooth 1200/500Hz @ 1Hz - *D.I.N.*	0 0 0 1 0 0	Tone 15	Tone 2
Tone 10	Alternating 2400/2900Hz @ 2Hz	1 0 0 1 0 0	Tone 7	Tone 5
Tone 11	Intermittent 1000Hz @ 1Hz	0 1 0 1 0 0	Tone 2	Tone 5
Tone 12	Alternating 800/1000Hz @ 0.875Hz	1 1 0 1 0 0	Tone 4	Tone 5
Tone 13	Intermittent 2400Hz @ 1Hz	0 0 1 1 0 0	Tone 15	Tone 5
Tone 14	Intermittent 800Hz 0.25s ON, 1s OFF	1 0 1 1 0 0	Tone 4	Tone 5
Tone 15	Continuous 800Hz	0 1 1 1 0 0	Tone 2	Tone 5
Tone 16	Intermittent 660Hz 150Ns ON, 150ms OFF	1 1 1 1 0 0	Tone 18	Tone 5
Tone 17	Alternating 544Hz (100ms) / 440Hz (400ms) – *NFS 32-001*	0 0 0 0 1 0	Tone 2	Tone 27
Tone 18	Intermittent 660Hz 1.8s ON, 1.8s OFF	1 0 0 0 1 0	Tone 2	Tone 5
Tone 19	Sweep 1400Hz to1600Hz up 1s 1600Hz to 1400Hz down 0.5s	0 1 0 0 1 0	Tone 2	Tone 5
Tone 20	Continuous 660Hz	1 1 0 0 1 0	Tone 2	Tone 5
Tone 21	Alternating 554/440Hz @ 1Hz	0 0 1 0 1 0	Tone 2	Tone 5
Tone 22	Intermittent 544Hz @ 0.875Hz	1 0 1 0 1 0	Tone 2	Tone 5
Tone 23	Intermittent 800Hz @ 2Hz	0 1 1 0 1 0	Tone 6	Tone 5
Tone 24	Sweeping 800/1000Hz @ 50Hz	1 1 1 0 1 0	Tone 29	Tone 5
Tone 25	Sweeping 2400/2900Hz @ 50Hz	0 0 0 1 1 0	Tone 29	Tone 5
Tone 26	Simulated bell	1 0 0 1 1 0	Tone 2	Tone 15
Tone 27	Continuous 554Hz	0 1 0 1 1 0	Tone 26	Tone 5
Tone 28	Continuous 440Hz	1 1 0 1 1 0	Tone 2	Tone 5
Tone 29	Sweeping 800/1000Hz @ 7Hz	0 0 1 1 1 0	Tone 7	Tone 5
Tone 30	Continuous 300Hz	1 0 1 1 1 0	Tone 2	Tone 5
Tone 31	Sweeping 660/1200 @ 1Hz	0 1 1 1 1 0	Tone 26	Tone 5
Tone 32	Two Tone Chime	1 1 1 1 1 0	Tone 26	Tone 15
Tone 33	Intermittent 745Hz	0 0 0 0 0 1	Tone 2	Tone 5
Tone 34	Alternating 1000/2000Hz @ 0.5s – *Singapore*	1 0 0 0 0 1	Tone 38	Tone 45
Tone 35	420Hz @ 0.625s - *Australian Alert*	0 1 0 0 0 1	Tone 36	Tone 5
Tone 36	500-1200Hz 3.75s / 0.25s - *Australian Evacuate*	1 1 0 0 0 1	Tone 35	Tone 5
Tone 37	Continuous 1000Hz	0 0 1 0 0 1	Tone 9	Tone 45
Tone 38	Continuous 2000Hz	1 0 1 0 0 1	Tone 34	Tone 45
Tone 39	Intermittent 800Hz 0.25s ON 1s OFF	0 1 1 0 0 1	Tone 23	Tone 17
Tone 40	Alternating 544Hz (100ms) / 440Hz (400ms) – *NFS 32-001*	1 1 1 0 0 1	Tone 31	Tone 27
Tone 41	Motor Siren – Slow rise to 1200Hz	0 0 0 1 0 1	Tone 2	Tone 5
Tone 42	Motor Siren – Slow rise to 800Hz	1 0 0 1 0 1	Tone 2	Tone 5
Tone 43	Continuous 1200Hz	0 1 0 1 0 1	Tone 2	Tone 5
Tone 44	Motor Siren – Slow rise to 2400Hz	1 1 0 1 0 1	Tone 2	Tone 5
Tone 45	Intermittent 1000Hz 1s ON, 1s OFF	0 0 1 1 0 1	Tone 38	Tone 34
Tone 46	Sawtooth 1200/500Hz @ 1Hz - *D.I.N. (PFEER P.T.A.P)*	1 0 1 1 0 1	Tone 47	Tone 37
Tone 47	Intermittent 1000Hz 1s ON, 1s OFF – *PFEER General Alarm*	0 1 1 1 0 1	Tone 46	Tone 37
Tone 48	420Hz @ 0.625s - *Australian Alert*	1 1 1 1 0 1	Tone 49	Tone 5
Tone 49	500-1200Hz 3.75s / 0.25s - *Australian Evacuate*	0 0 0 0 1 1	Tone 26	Tone 37

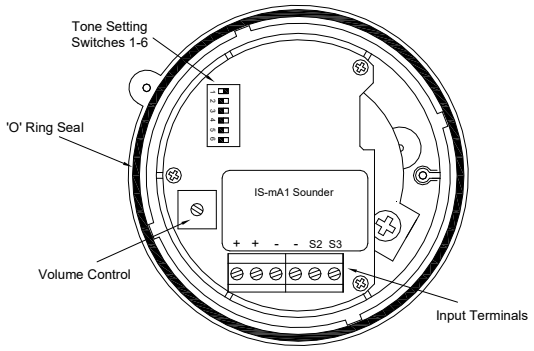

Fig 2 Location of field terminals and controls.

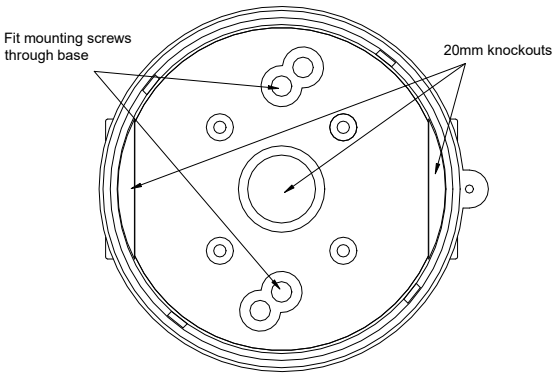

Fig 3 Mounting Sounder Base.

4.5 Other intrinsic safety certifications

Please contact European Safety Systems Ltd. for details of non-European intrinsic safety approvals.

5) Installation

IS-mA1 minialarm sounders should only be installed by trained competent personnel.

5.1 Mounting

The IS-mA1 minialarm sounder may be secured to any flat surface by inserting two mounting screws through the back of the round base (see figure 3). The enclosure provides IP65 protection and is suitable for installation in exterior locations provided that the area around the two mounting screws through the back of the base moulding has been sealed and that suitable cable glands with the required IP rating have been used.

5.2 Installation procedure

a. Unscrew the sounder unit security screw and remove the sounder section from the base by turning it anti-clockwise. Ensure that the 'O' ring seal remains in place.

b. Remove the required 20mm knockout section(s) depending on system wiring and mount the base to a flat surface by inserting two screws through the back of the base.

c. Fit the required number of 20mm cable glands or conduit entries into the base and connect the field wiring to the appropriate sounder terminals as shown in section 6 and fig 2 of this manual. The power supply terminals + and - are duplicated so that sounders may be connected in parallel, or an end of line monitoring resistor may be fitted.

d. Select the required output tone by positioning the six switches as shown in Table 1 and Fig 2.

e. Apply power to the sounder and adjust the internal volume control to provide the required sound level.

f. Check that the 'O' ring seal is correctly located on the sounder section (see Fig. 2) and insert the sounder section into the base. Push it fully home and turn it clockwise to align the mouldings before tightening the security screw.

6) Electrical System Design For Installation In Hazardous Areas Using Zener Barriers

6.1 Single stage alarm

If the control switch is in the positive supply, or the power supply is being turned on and off, only a single channel Zener barrier is required as shown in Fig 4. This circuit may also be used if the sounder is being controlled by a mechanically activated switch on the hazardous area side of the barrier.

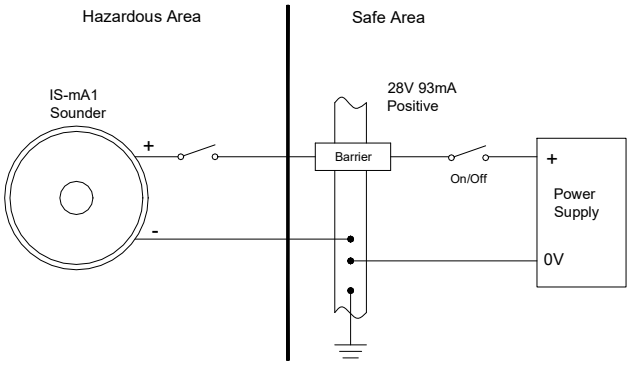

Fig 4 Single stage alarm using single channel barrier.

If the control switch must be in the negative supply, the circuit shown in Fig 5 may be used. Any diode return barrier certified Ex ia by a EC Notified Body may be used, providing its voltage drop is less than 0.9V.

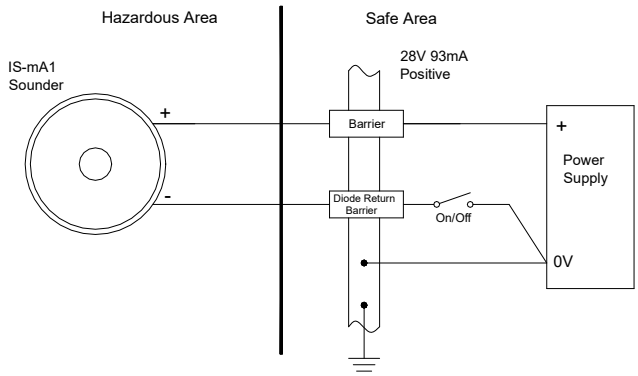

Fig 5 Single stage alarm using two channel barrier.

6.2 Multi-stage alarm

Connecting terminal S2 to 0V activates the second stage alarm, and similarly terminal S3 for the third stage alarm. Fig 6 shows how the diode return barriers may be used. If only two stages of alarm are required the third stage barrier should be omitted, the 28V 93mA barrier and the single diode return channel may then be contained in one package.

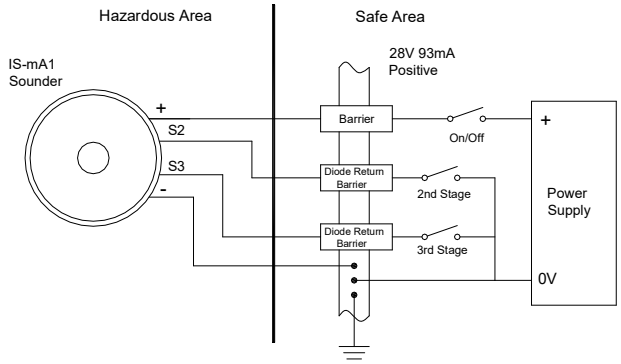

Fig 6 Multi stage alarm using Zener barriers.

7) Electrical System Design For Installation In Hazardous Areas Using Galvanic Isolators

Galvanic isolators do not require a high integrity earth connection. For small systems where a high integrity earth is not already available, the use of galvanic isolators often reduces the overall installation cost and simplifies design.

7.1 Single stage alarm

The IS-mA1 minialarm sounder may be powered by any galvanic isolator having output parameters within the limits specified in section 4.3, which has been certified Ex ia by an EC Notified Body. The sounder may be controlled by turning the galvanic isolator on and off, or by a mechanically activated switch on the hazardous area side of the isolator.

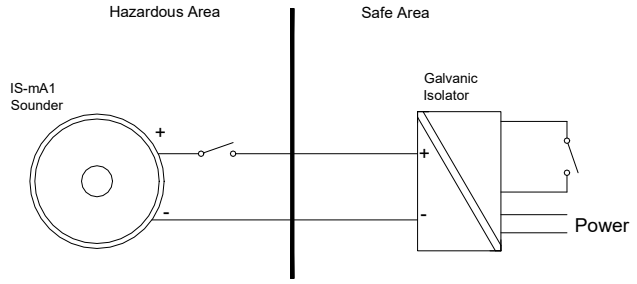

Fig 7 Single stage alarm using galvanic isolator.

7.2 Multi stage alarm

The IS-mA1 sounder second and third stages may be activated by using Galvanically Isolated Relays that have output parameters within the limits specified in section 4.4. which have been certified Ex ia by an EC Notified Body.

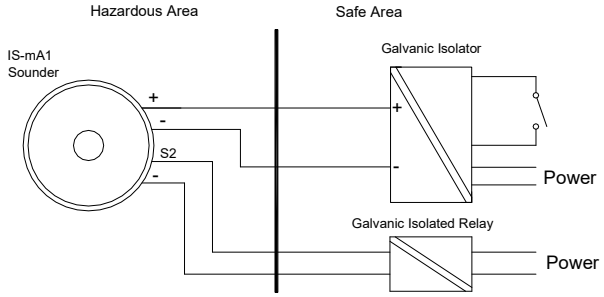

Fig 8 Multi stage alarm using galvanic isolated relays

8) Cable Parameters

The maximum permitted cable parameters are as specified on the certificate of the Zener barrier or galvanic isolator that has been selected for the installation. Normally the limits are not restrictive, but care should be taken not to exceed a capacitive limit of 83nF for installations when very long cables are used.

9) Volume Control

The output level of the IS-mA1 sounder can be set by adjusting the volume control potentiometer (see Fig 2).

10) Maintenance

The sounder should be regularly inspected to ensure that it has not been damaged. Frequency of inspection depends upon environmental conditions, but initially we recommend that this should be done annually.

No attempt should be made to repair a faulty ISmA1 sounder. Suspect sounders must be returned to European Safety Systems Ltd. or to your local agent for repair.

11) Guarantee

Sounders that fail within the guarantee period should be returned to European safety Systems Ltd. It is helpful if a brief description of the fault symptoms is provided.

12) Customer Comments

European Safety Systems Ltd. is always pleased to receive comments from customers about our products and services. All communications are acknowledged and whenever possible, suggestions are implemented.

IECEx Approval

The IS-mA1 Sounder has also been approved to the IECEx scheme.

The installation requirements for IS-mA1 sounders approved to the IECEx scheme are the same as the installation requirements for IS-mA1 sounders approved to the ATEX directive.

Certificate No. IECEx SIR 06.0045X

Marking: Ex ia IIC T4 Ga (Ta = -40ºC to +60ºC)

Standards: IEC 60079-0:2017
IEC 60079-11:2011
IEC 60079-26:2014-10

CONDITIONS OF CERTIFICATION (as stated on the IECEx Certificate of Conformity IECEx SIR 06.0045X)

- The equipment has an ingress protection rating of IP65. However, if it has been supplied without a cable entry device, then the user shall ensure that the devices that are fitted will provide an ingress protection that is appropriate to the environment in which it is installed i.e. IP20 on better. If only one of the two cable entries are used, then the unused entry 'knockout' shall be left intact or fitted with a blanking device that ensues ingress protection appropriate to the environment in which it is installed i.e. IP20 or better.

- The total capacitance connected to terminals + w.r.t. terminals - (i.e. the capacitance of the cable plus any other capacitance) shall not exceed 83nF.

- The enclosure is non-conducting and may generate an ignition-capable level of electrosatic charges under certain extreme conditions. The user should ensure that the equipment is not installed in a location where it may be subjected to external conditions that might cause a build-up of electrostatic charges on non-conducting surfaces, additionally, cleaning of the equipment should be done only with a damp cloth.

- The equipment shall only be supplied via terminal + w.r.t. terminal - from a barrier having a maximum open circuit voltage Uo that is $\leq$ 28V and a maximum short circuit current Io that is $\leq$ 93mA, where Io is resistively limited.

The IS-mA1 sounders are marked with the certification requirements for the ATEX and IECEx and approvals.

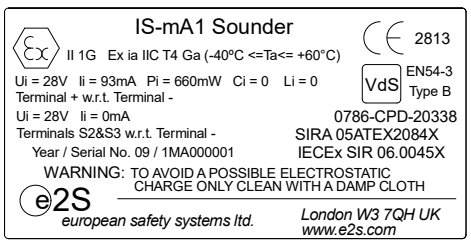

FM Approval

The IS-mA1 Sounder has also been FM Listed.

Marking: IS Class I, Zone 0, AEx ia IIC T4

IS Class I, Division 1, Groups A, B, C, D

See the Control Drawings D 5035 Sheets 1 and 2 for installation details and entity parameters.

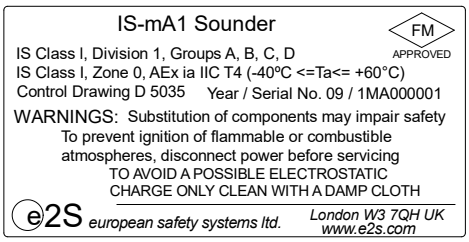

CPD Directive 89/106/EEC

The IS-mA1 Sounder is compliant with the requirements of the Construction Products Directive 89/106/EEC.

EN54-3 Type B IP65

Voltage Range 18 – 28V DC via a safety barrier (see sections 6 and 7).

Tone	Description
2	800/1000Hz @ 0.25 Seconds Alternating
3	500/1200Hz @ 0.3Hz 0.5 Sec Gap Slow Whoop
9	1200/500Hz @ 1Hz DIN
15	800Hz Continuous
16	660Hz 150mS ON 150ms OFF
17	554Hz (100mS) / 440Hz (400mS) NF S 32-001

The tones listed have been tested to EN54-3 and are compliant with the Construction Products Directive 89/106/EEC.

EN54-3 Test data document D5073

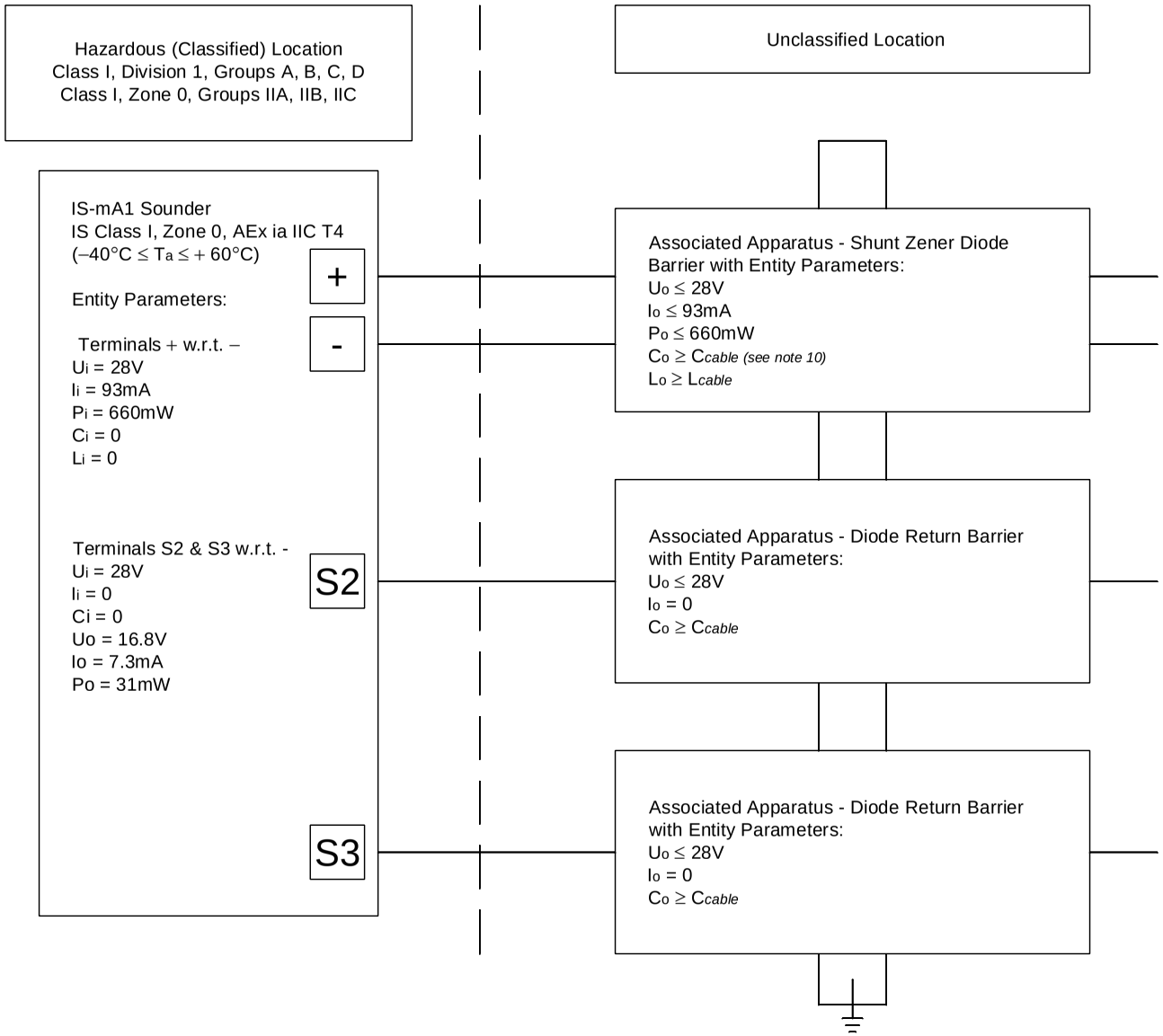

1. No revision to drawing without prior FM approval.

2. The associated apparatus must be FM approved.

3. The associated apparatus manufacturer's installation drawing must be followed when installing this equipment.

4. Installation should be in accordance with ANSI/ISA RP12.06.01 "Installation of Intrinsically Safe Systems for Hazardous (Classified) Locations" and the National Electrical Code (ANSI/NFPA 70).

5. The resistance between the intrinsically safe ground and the earth ground must be less the 1 ohm.

6. The Shunt Zener Diode Barrier must be a FM approved, resistively limited, single channel barrier having parameters less than, or equal to, those quoted, and for which the output is non-ignition capable for the Class, Division or Zone and Group of use.

7. The IS-mA1 Sounder enclosure has an ingress protection rating of IP 65. If supplied without cable entry devices then metallic or plastic cable glands, or conduit hubs, shall be fitted that provide the required environmental protection.

8. To prevent ignition of flammable or combustible atmospheres, disconnect power before servicing.

9. Substitution of components may impair safety.

10. The total capacitance connected to terminals +/- of the sounder, i.e. C_{cable} plus any other capacitance, shall not exceed 83nF.

Notes:

CAUTION - Bonding between conduit connections is not automatic and must be provided as part of this installation.

CAUTION - The clearance between sounder terminals S2 and S3 is less than 6mm.

SCHEDULE DRAWING

No modification permitted without reference to the "Notified Body"

A	MRS	10-01-07		
Issue:	Appd.	Date:	Drawn: MRS	Date: 21-04-06

Title

IS-mA1 Sounder
Control Drawing for shunt zener diode barrier / diode return barrier.

e2S warning signals
European Safety Systems Ltd.
Impress House
Mansell Road
Acton
London W3 7QH

Drawing No. D 5035 Sheet 1 of 2

Computer Ref. D5035a.dwg

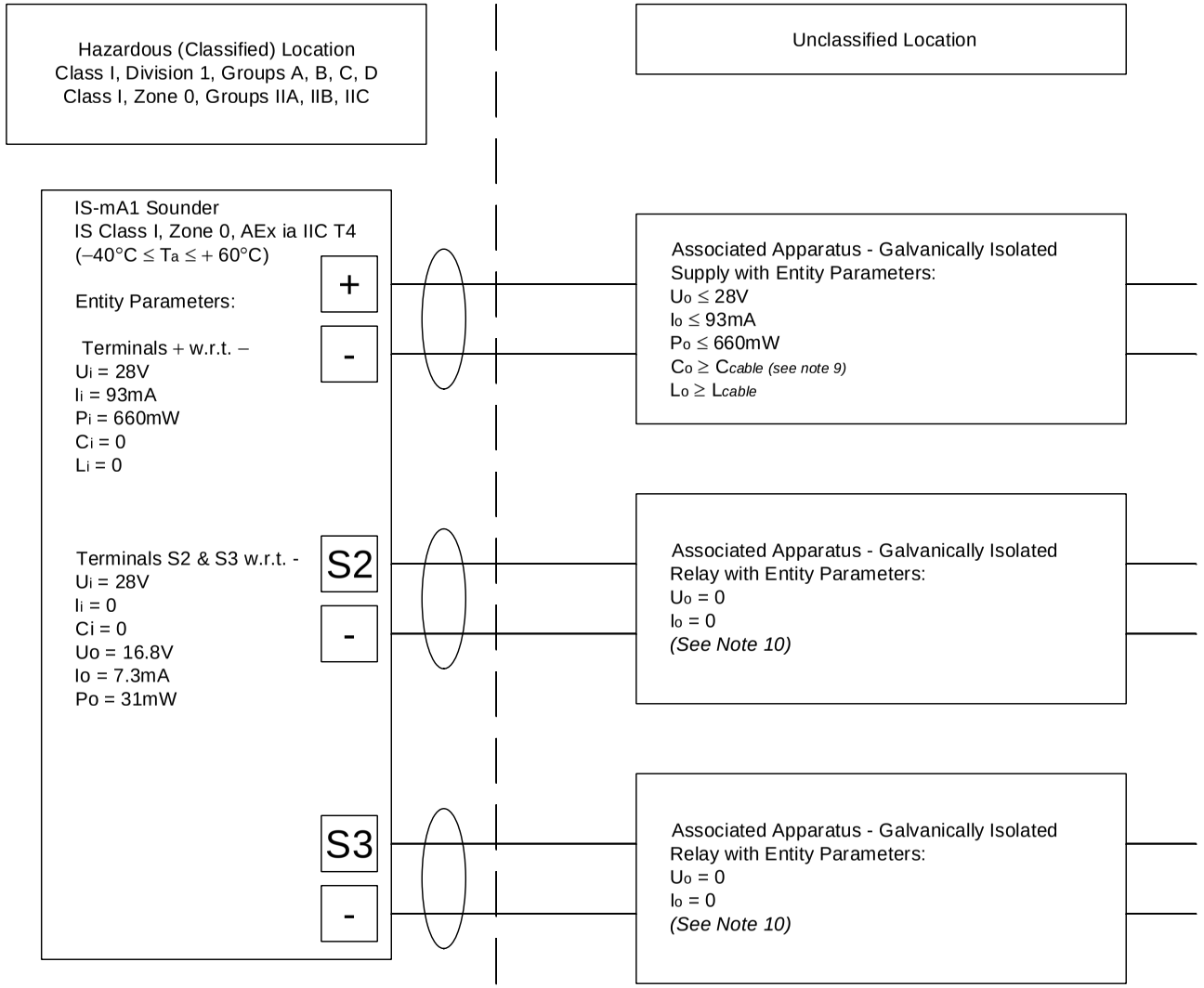

1. No revision to drawing without prior FM approval.

2. The associated apparatus must be FM approved.

3. The associated apparatus manufacturer's installation drawing must be followed when installing this equipment.

4. Installation should be in accordance with ANSI/ISA RP12.06.01 "Installation of Intrinsically Safe Systems for Hazardous (Classified) Locations" and the National Electrical Code (ANSI/NFPA 70).

5. The Galvanically Isolated Supply must be a FM approved, resistively limited, single channel supply having parameters less than, or equal to, those quoted, and for which the output is non-ignition capable for the Class, Division or Zone and Group of use.

6. The IS-mA1 Sounder enclosure has an ingress protection rating of IP 65. If supplied without cable entry devices then metallic or plastic cable glands, or conduit hubs, shall be fitted that provide the required environmental protection.

7. To prevent ignition of flammable or combustible atmospheres, disconnect power before servicing.

8. Substitution of components may impair safety.

9. The total capacitance connected to terminals +/- of the sounder, i.e. C_{cable} plus any other capacitance, shall not exceed 83nF.

10. The C_{cable} and L_{cable} of the cables connecting the galvanically isolated relays to sounder terminals S2/- and S3/- shall be less than, or equal to, the C_{cable} and L_{cable} of the cable connecting the galvanically isolated supply to sounder terminals +/-.

Notes:

CAUTION - Bonding between conduit connections is not automatic and must be provided as part of this installation.

CAUTION - The clearance between sounder terminals S2 and S3 is less than 6mm.

SCHEDULE DRAWING

No modification permitted without reference to the "Notified Body"

A	MRS	10-01-07		
Issue:	Appd.	Date:	Drawn: MRS	Date: 21-04-06

Title

IS-mA1 Sounder
Control Drawing for galvanically isolated supply / isolated relay installation.

e2S warning signals
European Safety Systems Ltd.
Impress House
Mansell Road
Acton
London W3 7QH

Drawing No. D 5035 Sheet 2 of 2

Computer Ref. D5035b.dwg