E11564

Connection cable

VDOAF032MSS01,5H03STGH030MSS

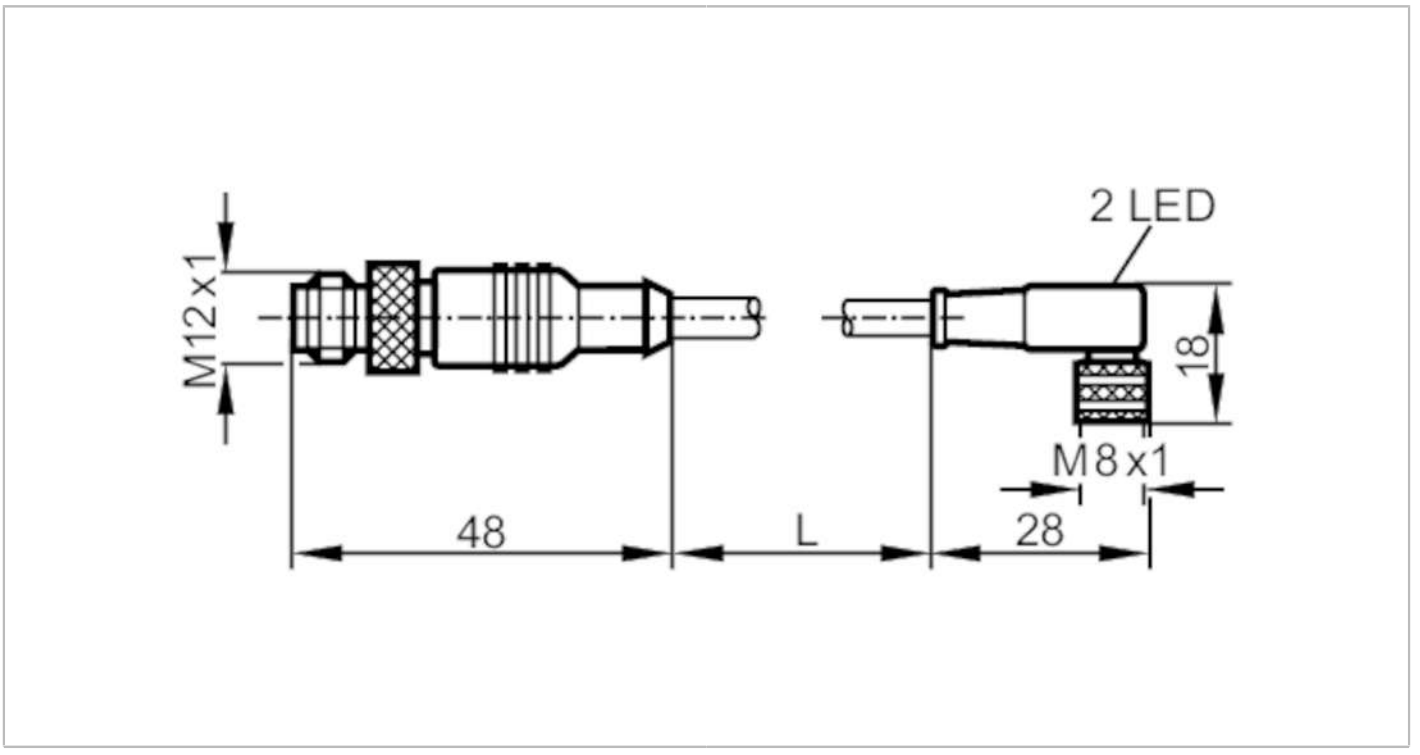

Application			
Special feature		Free from silicone; Halogen-free; Gold-plated contacts	
Free from silicone		yes	
Electrical data			
Operating voltage	[V]	10...30 DC	
Protection class		III	
Max. current load total	[A]	3	
Outputs			
Electrical design		PNP	
Operating conditions			
Ambient temperature	[°C]	-25...85	
Protection		IP 68	
Mechanical data			
Weight	[g]	56.2	
Materials		PUR	
Moulded-body material		PUR	
Material nut		brass, nickel-plated	
Displays / operating elements			
Display		switching status	1 x LED, yellow
		operation	1 x LED, green
Remarks			
Pack quantity		1 pcs.	

E11564

Connection cable

VDOAF032MSS01,5H03STGH030MSS

Electrical connection - plug

Connector: 1 x M12, straight; coding: A; Moulded body: PUR; Locking: brass, nickel-plated; Contacts: gold-plated; Tightening torque: 0.7...0.9 Nm

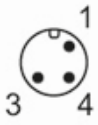

Electrical connection

Cable: 1.5 m, PUR, Halogen-free, black, Ø 5 mm; 3 x 0.34 mm² (42 x Ø 0.1 mm)

Connection

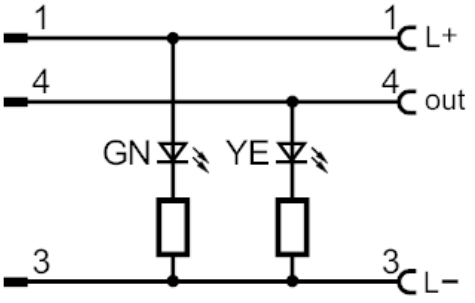

Electrical connection - Buchse



E11564

Connection cable

VDOAF032MSS01,5H03STGH030MSS

Connection

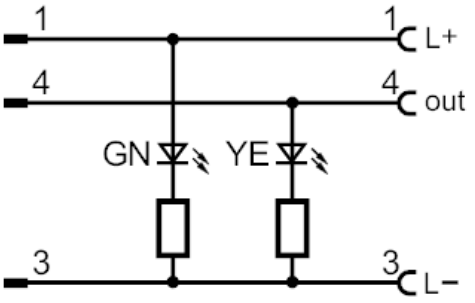

Electrical connection - socket

Connector: 1 x M8, angled; Moulded body: PUR; Locking: brass, nickel-plated; Contacts: gold-plated; Tightening torque: 0.6...0.7 Nm