Operating instructions

ebm-papst Mulfingen GmbH & Co. KG
Bachmühle 2
D-74673 Mulfingen
Phone +49 (0) 7938 81-0
Fax +49 (0) 7938 81-110
info1@de.ebmpapst.com
www.ebmpapst.com

CONTENTS

1. SAFETY REGULATIONS AND NOTES 1
1.1 Levels of hazard warnings 1
1.2 Staff qualification 1
1.3 Basic safety rules 1
1.4 Electrical voltage 1
1.5 Safety and protective functions 2
1.6 Mechanical movement 2
1.7 Emission 2
1.8 Hot surface 2
1.9 Transport 2
1.10 Storage 2

2. PROPER USE 3

3. TECHNICAL DATA 4
3.1 Product drawing 4
3.2 Nominal data 5
3.3 Data in accordance with ecodesign regulation EU 327/2011 5
3.4 Technical features 5
3.5 Mounting data 5
3.6 Transport and storage conditions 6

4. CONNECTION AND START-UP 6
4.1 Connecting the mechanical system 6
4.2 Connecting the electrical system 6
4.3 Connection of the cables 7
4.4 Connection screen 8
4.5 Checking the connections 9
4.6 Switch on device 9
4.7 Switching off the device 9

5. MAINTENANCE, MALFUNCTIONS, POSSIBLE CAUSES AND REMEDIES 9
5.1 Cleaning 10
5.2 Safety test 10
5.3 Disposal 10

1. SAFETY REGULATIONS AND NOTES

Please read these operating instructions carefully before starting to work with the device. Observe the following warnings to prevent malfunctions or physical damage to both property and people.
These operating instructions are to be regarded as part of this device.
If the device is sold or transferred, the operating instructions must accompany it.
These operating instructions may be duplicated and forwarded for information about potential dangers and their prevention.

1.1 Levels of hazard warnings

These operating instructions use the following hazard levels to indicate potentially hazardous situations and important safety regulations:



DANGER
Indicates an imminently hazardous situation which, if not avoided, will result in death or serious injury. Compliance with the measures is mandatory.

WARNING
Indicates a potentially hazardous situation which, if not avoided, could result in death or serious injury. Exercise extreme caution while working.

CAUTION
Indicates a potentially hazardous situation which, if not avoided, may result in minor or moderate injury or damage of property.

NOTE
A potentially harmful situation can occur and, if not avoided, can lead to property damage.

1.2 Staff qualification

The device may only be transported, unpacked, installed, operated, maintained and otherwise used by qualified, trained and authorised technical staff.
Only authorised specialists are permitted to install the device, to carry out a test run and to perform work on the electrical installation.

1.3 Basic safety rules

Any safety hazards stemming from the device must be re-evaluated once it is installed in the end device.
The local industrial safety regulations must always be observed when working on the device.
Keep the workplace clean and tidy. Untidiness in the working area increases the risk of injury.
Observe the following when working on the unit:

⇒ Do not make any modifications, additions or conversions to the device without the approval of ebm-papst.

1.4 Electrical voltage

⇒ Check the electrical equipment of the device at regular intervals, refer to chapter 5.2 Safety test.

⇒ Replace loose connections and defective cables immediately.



DANGER
Electrical load on the device
Risk of electric shock

→ Stand on a rubber mat if you are working on an electrically charged device.

Translation of the original operating instructions

WARNING
Terminals and connections have voltage even with a unit that is shut off
Electric shock

→ Wait five minutes after disconnecting the voltage at all poles before opening the device.

CAUTION
In the event of failure, there is electric voltage at the rotor and impeller
The rotor and impeller are base insulated.

→ Do not touch the rotor and impeller once they are installed.

CAUTION
The motor restarts automatically when operating voltage is applied, e.g. after a power failure.
Danger of injury

→ Keep out of the danger zone of the device.

→ When working on the device, switch off the mains supply voltage and secure the latter from being switched on again.

→ Wait until the device stops.

1.5 Safety and protective functions

DANGER
Guard missing and guard not functioning
Without a guard there is a risk of serious injury, for instance when reaching into the device during operation. Loose parts or items of clothing could be drawn in.

→ The device is a built-in component. As the operator, you are responsible for ensuring that the device is secured adequately.# Operate the device only with a fixed protective device and guard grille.

→ Stop the device immediately if a protective device is found to be missing or ineffective.

1.6 Mechanical movement

DANGER
Rotating device
Body parts that come into contact with the rotor and impeller can be injured.

→ Secure the device against accidental contact.

→ Before working on the system/machine, wait until all parts have come to a standstill.

WARNING
Rotating device
Long hair, dangling items of clothing, jewellery and similar items can become entangled and be pulled into the device. Risk of injury.

→ Do not wear any loose-fitting or dangling clothing or jewellery while working on rotating parts.

→ Protect long hair with a cap.

1.7 Emission

WARNING
Depending on the installation and operating conditions, a sound pressure level greater than 70 dB(A) may arise.
Danger of noise-induced hearing loss

→ Take appropriate technical safety measures.

→ Protect operating personnel with appropriate safety equipment, e.g. hearing protection.

→ Also observe the requirements of local agencies.

1.8 Hot surface

CAUTION
High temperature at the motor housing
Danger of burn injuries

→ Ensure that sufficient protection against accidental contact is provided.

1.9 Transport

NOTE
Transport of device

→ Transport the device in its original packaging only.

→ Secure the device so that it does not slip, e.g. by using a clamping strap.

1.10 Storage

⇒ Store the device, partially or fully assembled, in the original packaging in a clean, dry and weatherproof place free of vibrations.

⇒ Protect the device against environmental effects and dirt until final installation.

⇒ We recommend storing the device for no longer than one year in order to guarantee trouble-free operation and longest possible service life.

⇒ Even devices explicitly intended for outdoor use are to be stored as described prior to commissioning.

⇒ Maintain the storage temperature, see chapter 3.6 Transport and storage conditions.

Translation of the original operating instructions

ebm-papst Mulfingen GmbH & Co. KG · Bachmühle 2 · D-74673 Mulfingen · Phone +49 (0) 7938 81-0 · Fax +49 (0) 7938 81-110 · info1@de.ebmpapst.com · www.ebmpapst.com

2. PROPER USE

The device is exclusively designed as a built-in device for conveying air according to its technical data.
Any other usage above and beyond this does not conform with the intended purpose and constitutes misuse of the device.
Customer equipment must be capable of withstanding the mechanical and thermal stresses that can arise from this product. This applies for the entire service life of the equipment in which this product is installed.

Proper use also includes:

- Use the device in power systems with earthed neutral (TN/TT power systems) only.
- Conveying of air at an ambient air pressure of 800 mbar to 1050 mbar.
- Using the device in accordance with the permitted ambient temperature, see chapter 3.6 Transport and storage conditions and chapter 3.2 Nominal data.
- Operating the device with all protective features in place.
- Minding the operating instructions.

Improper use

Using the device in the following ways is particularly prohibited and may cause hazards:

- Operating the device with an imbalance, e.g. caused by dirt deposits or icing.
- Resonance mode, operation with heavy vibrations. These also include vibrations that are transmitted from the customer system to the fan.
- Operation in medical equipment with a life-sustaining or lifesaving function.
- Moving solids content in flow medium.
- Painting the device
- Connections (e.g. screws) coming loose during operation.
- Moving air that contains abrasive particles.
- Moving highly corrosive air, e.g. salt spray mist. Exceptions are devices that are intended for salt spray mist and protected accordingly.
- Moving air that contains dust pollution, e.g. suctioning off saw dust.
- Operating the device close to flammable materials or components.
- Operating the device in an explosive atmosphere.
- Using the device as a safety component or for taking on safety-related functions.
- Operation with completely or partially disassembled or modified protective features.
- In addition, all application options that are not listed under proper use.

Translation of the original operating instructions

ebm-papst Mulfingen GmbH & Co. KG · Bachmühle 2 · D-74673 Mulfingen · Phone +49 (0) 7938 81-0 · Fax +49 (0) 7938 81-110 · info1@de.ebmpapst.com · www.ebmpapst.com

3. TECHNICAL DATA

3.1 Product drawing

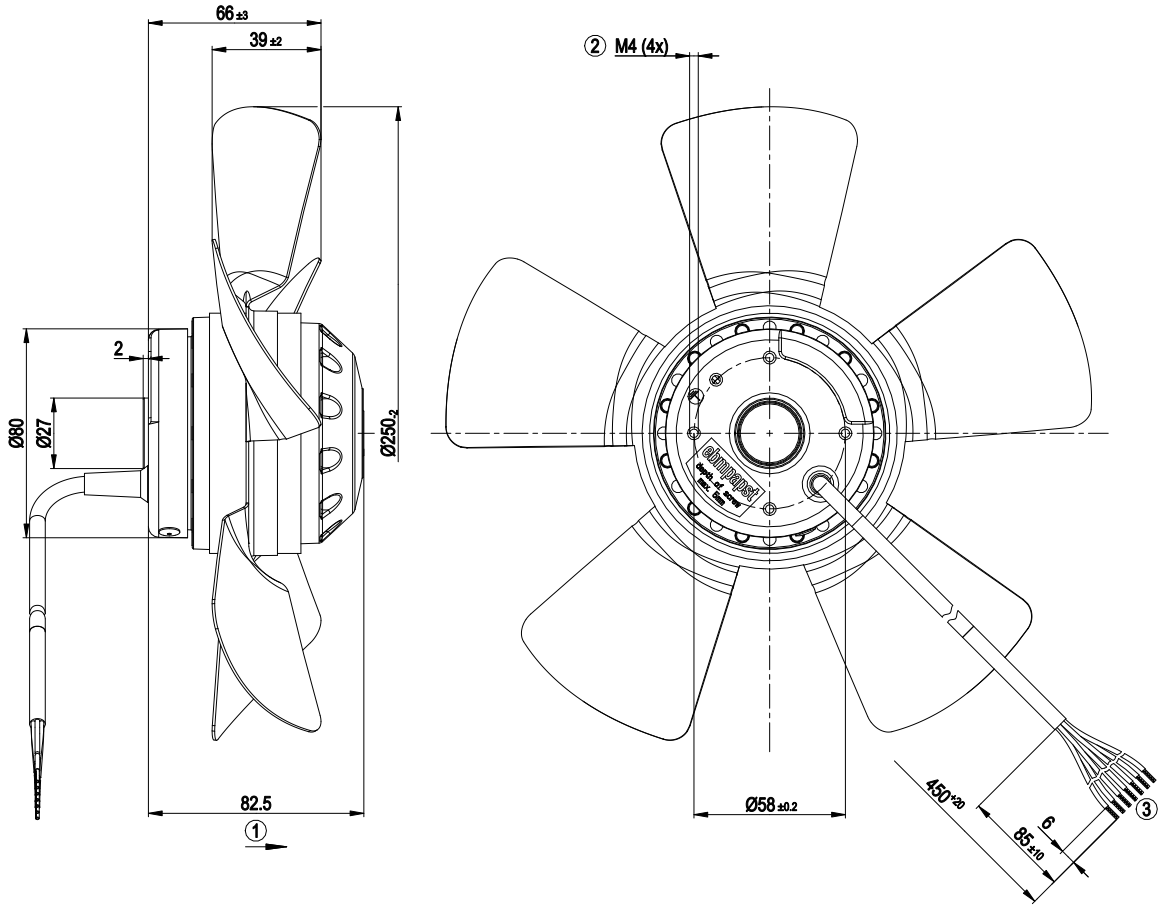

All measures have the unit mm.

1	Direction of air flow "A"
2	Thread reach max. 5 mm
3	Connection line PVC 7 x 0.5 mm²; 7x lead tips crimped

Translation of the original operating instructions

ebm-papst Mulfingen GmbH & Co. KG · Bachmühle 2 · D-74673 Mulfingen · Phone +49 (0) 7938 81-0 · Fax +49 (0) 7938 81-110 · info1@de.ebmpapst.com · www.ebmpapst.com

3.2 Nominal data

Motor	M2D068-DF	
Phase	3~	3~
Nominal voltage / VAC	400	400
Connection	Y	Y
Frequency / Hz	50	60
Type of data definition	fa	fa
Valid for approval / standard	CE	CE
Speed (rpm) / min-1	2650	2950
Power input / W	110	160
Current draw / A	0.22	0.26
Max. back pressure / Pa	250	300
Min. ambient temperature / °C	-25	-25
Max. ambient temperature / °C	70	40
Starting current / A	0.78	0.75

ml = Max. load · me = Max. efficiency · fa = Running at free air
cs = Customer specs · cu = Customer unit

Subject to alterations

3.3 Data in accordance with ecodesign regulation EU 327/ 2011

	Actual	Request 2015
01 Overall efficiency η_{es} / %	28.1	28.1
02 Measurement category	A	
03 Efficiency category	Static	
04 Efficiency grade N	40	40
05 Variable speed drive	No	
06 Year of manufacture	The year of manufacture is specified on the rating plate on the product.	
07 Manufacturer	ebm-papst Mulfingen GmbH & Co. KG County court Stuttgart · HRA 590344 D-74673 Mulfingen	
08 Type	A2D250-AA02-02	
09 Power input P_e / kW	0.13	
09 Air flow q_v / m³/h	1205	
09 Pressure increase total p_{fs} / Pa	111	
10 Speed (rpm) n / min-1	2595	
11 Specific ratio*	1.00	
12 Recycling/disposal	Information on recycling and disposal is provided in the operating instructions.	
13 Maintenance	Information on installation, operation and maintenance is provided in the operating instructions.	
14 Additional components	Components used to calculate the energy efficiency that are not apparent from the measurement category are detailed in the CE declaration.	

* Specific ratio = 1 + p_{fs} / 100 000 Pa

Data definition with optimum efficiency. The indicated efficiency values for obtaining conformity with the Ecodesign Directive EU 327/2011 were achieved with defined air conduction components (e.g. inlet nozzles). The dimensions are to be requested from ebm-papst. If other air guide geometries are used on the installation side, the ebm-papst evaluation loses its validity/conformity must be confirmed again. The product does not fall within the scope of Regulation (EU) 2019/1781 due to the exception specified in Article 2(2a) (motors completely integrated into a product).

3.4 Technical features

Mass	2.06 kg
Size	250 mm
Motor size	68
Surface of rotor	Coated in black
Material of blades	Sheet steel, coated in black
Number of blades	5
Direction of air flow	A
Direction of rotation	Clockwise, seen on rotor
Type of protection	IP44; Depending on installation and position as per EN 60034-5
Insulation class	"B"
Humidity (F) / environmental protection class (H)	H1
Mounting position	Shaft horizontal or rotor on bottom; rotor on top on request
Condensation drainage holes	Rotor-side
Operation mode	S1
Motor bearing	Ball bearing
Touch current acc. IEC 60990 (measuring network Fig. 4, TN system)	< 0.75 mA
Cable exit	Lateral
Protection class	I (if protective earth is connected by customer)
Product conforming to standard	EN 60335-1, motor does not have factory-installed overheating protection
Standard conformity	UKCA
Product conforming to standard	CE
Approval	EAC; CCC

⇒ Use the device in accordance with its protection type.

Notes on surface quality

The surfaces of the products conform to the generally applicable industrial standard. The surface quality may vary during the production period. Strength, dimensional stability and dimensional accuracy are not affected by this.
The colour pigments of the paints used react perceptibly to UV light over the course of time. To prevent the formation of patches and fading, the product is to be protected against UV radiation. Changes in colour are not a reason for complaint and are not covered by the warranty. UV radiation in the frequency range and the intensity of natural solar radiation has no effect on the technical properties of the products.

3.5 Mounting data

Any further mounting data required can be taken from the product drawing or chapter 4.1 Connecting the mechanical system.

Strength class for mounting screws	8.8

For depth of screw, see chapter 3.1 Product drawing

⇒ Secure the mounting screws against accidentally coming loose (e.g. by using self-locking screws).

Translation of the original operating instructions

ebm-papst Mulfingen GmbH & Co. KG · Bachmühle 2 · D-74673 Mulfingen · Phone +49 (0) 7938 81-0 · Fax +49 (0) 7938 81-110 · info1@de.ebmpapst.com · www.ebmpapst.com

3.6 Transport and storage conditions

Max. permissible ambient motor temp. (transp./ storage)	+ 80 °C
Min. permissible ambient motor temp. (transp./storage)	- 40 °C

4. CONNECTION AND START-UP

4.1 Connecting the mechanical system

CAUTION
Cutting and crushing hazard when removing the fan from the packaging

→ Carefully remove the device from its packaging, holding it by the centre of the blades only. Make sure to avoid any shock.

→ Wear safety shoes and cut-resistant safety gloves.

NOTE
Damage to device from vibration
Bearing damage, reduced service life

→ Forces or impermissibly high vibration levels must not be transmitted to the fan from system components.

→ If the fan is connected to air ducts, it should isolated from vibrations, for example using compensators or similar elements.

→ Fasten the fan to the substructure without distorting it.

⇒ Check the device for transport damage. Damaged devices must no longer be installed.

⇒ Install the undamaged device according to your application.

CAUTION
Possibility of damage to the device
Serious damage may result if the device slips during assembly.

→ Keep the device fixed in position at the installation location until all attachment screws have been tightened.

- The fan must not be strained on fastening.

4.2 Connecting the electrical system

DANGER
Electric voltage on the device
Electric shock

→ Always install a protective earth first.

→ Check the protective earth.

DANGER
Incorrect insulation
Risk of fatal injury from electric shock

→ Use only cables that meet the specified installation requirements for voltage, current, insulation material, load etc.

→ Route cables such that they cannot be touched by any rotating parts.

CAUTION
Electrical voltage
The fan is a built-in component and features no electrically isolating switch.

→ Only connect the fan to circuits that can be switched off with an all-pole separating switch.

→ When working on the fan, you must switch off the installation/machine in which the fan is installed and secure it from being switched on again.

NOTE
Water penetration into leads or wires
Water enters at the cable end on the customers side and can damage the device.

→ Make sure that the cable end is connected in a dry environment.

Connect the device only to circuits that can be switched off using an all-pole disconnecting switch.

4.2.1 Prerequisites

⇒ Check that the data on the type plate match the connection data.

⇒ Before connecting the device, ensure that the supply voltage matches the operating voltage of the device.

⇒ Only use cables designed for current according to the type plate. For determining the cross-section, follow the basic principles in accordance with EN 61800-5-1. The protective earth must have a cross-section equal to or greater than the outer conductor cross-section.
We recommend the use of 105°C cables. Ensure that the minimum cable cross-section is at least AWG26/0.13 mm².

Protective earth contact resistance as per EN 60335

Compliance with the resistance specifications as per EN 60335 for the protective earth connection circuit must be verified in the application. Depending on the installation situation, it may be necessary to connect an additional protective earth conductor by way of the extra protective earth terminal provided on the device.

4.2.2 Voltage control

NOTE
Excessive current may occur with speed control using transformers or electronic voltage regulators (e.g. phase angle control). In addition, depending on how the unit is installed, noise and vibration can occur with phase angle control. Vibrations can lead to bearing damage, which can lead to premature failure.

Heating-up of the motor when using voltage control must be checked by the customer following installation in the end device.

4.2.3 Frequency inverter

Please use a frequency converter only after consultation with ebm-papst.

For operation with frequency converters, fit sinusoidal filters that work on all poles (phase-phase and phase-earth) between the frequency converter and the motor.
During operation with frequency converters, an all-pole sine filter protects the motor against high-voltage transients that can destroy the winding insulation system, and against harmful bearing currents.

Translation of the original operating instructions

ebm-papst Mulfingen GmbH & Co. KG · Bachmühle 2 · D-74673 Mulfingen · Phone +49 (0) 7938 81-0 · Fax +49 (0) 7938 81-110 · info1@de.ebmpapst.com · www.ebmpapst.com

Heating-up of the motor when using a frequency converter must be checked by the customer following installation in the end device.

4.3 Connection of the cables

External leads are brought out of device.

⇒ First connect the "PE" (protective earth) connection.

- Connect the lines according to your application. When doing so, observe chapter 4.4 Connection screen.

4.3.1 Cable routing

No water may penetrate along the cable in the direction of the cable exit.

NOTE
Damage caused by moisture penetration.
Moisture can penetrate into the terminal box if water is constantly present at the cable glands.

→ To prevent the constant accumulation of water at the cable glands, the cable should be routed in a U-shaped loop (siphon) wherever possible.

→ If this is not possible, a drip edge can be produced by fitting a cable tie directly in front of the cable gland for example.

Fans installed lying flat

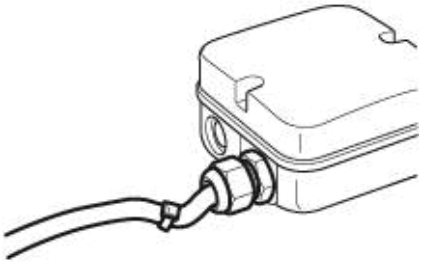

Fig. 1: Fan installed lying flat, cable routed in a U-shaped loop.

Fans installed in upright position

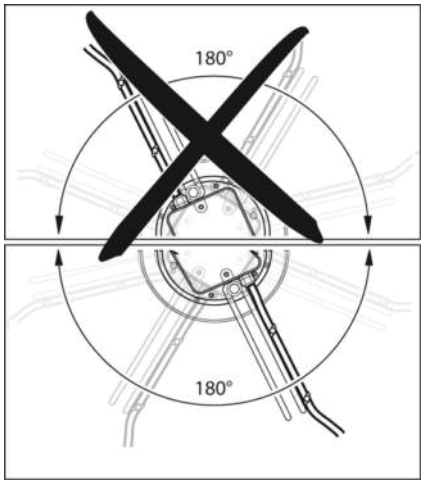

Fig. 2: Cable routing for fans installed in upright position. The cables must always be routed downwards.

4.3.2 Motor protection

WARNING
Device without overheating protection
The device is delivered without any automatically functioning overheating protection. The device can become hot and burn.

→ For the version without TOP, install an additional, suitable motor protection switch.

Translation of the original operating instructions

ebm-papst Mulfingen GmbH & Co. KG · Bachmühle 2 · D-74673 Mulfingen · Phone +49 (0) 7938 81-0 · Fax +49 (0) 7938 81-110 · info1@de.ebmpapst.com · www.ebmpapst.com

4.4 Connection screen

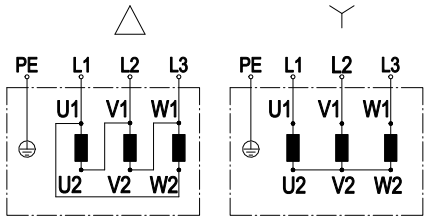

Change direction of rotation by reversing two phases

	Three-phase motor
Δ	Delta connection
Y	Star connection
L1	= U1 = black
L2	= V1 = blue
L3	= W1 = brown
U2	green
V2	white
W2	yellow
PE	green/yellow

Translation of the original operating instructions

ebm-papst Mulfingen GmbH & Co. KG · Bachmühle 2 · D-74673 Mulfingen · Phone +49 (0) 7938 81-0 · Fax +49 (0) 7938 81-110 · info1@de.ebmpapst.com · www.ebmpapst.com

4.5 Checking the connections

⇒ Make sure that the power is off (all phases).

⇒ Secure it from being switched on again.

⇒ Check the correct fit of the connection lines.

4.6 Switch on device

The device is not to be switched on until it has been installed properly and in accordance with its intended use, including the required protective devices and professional electrical connection. This also applies to devices which have already been equipped with plugs and terminals or similar connectors by the customer.

WARNING
Hot motor housing
Fire hazard

→ Ensure that no combustible or flammable materials are located close to the fan.

⇒ Inspect the device for visible external damage and the proper function of the protective features before switching it on.

⇒ Check the air flow paths of the fan for foreign objects and remove any that are found.

⇒ Apply the nominal voltage to the voltage supply.

NOTE
Damage to device by vibrations
Bearing damage, reduced service life

→ The fan must operate free of vibrations throughout its speed control range.

→ Strong vibrations can result from improper handling, imbalance resulting from damage during transport, or component-induced or structural resonances.

→ When putting the fan into service, determine the speed ranges with excessive vibration levels and also any resonance frequencies that may be present.

→ When regulating the speed, pass through resonance ranges as quickly as possible or find another remedy.

→ Operation at excessive vibration levels can lead to premature failure.

4.7 Switching off the device

⇒ Disconnect the device from the supply voltage at the main switch for the supply line.

⇒ When disconnecting, be sure to disconnect the earth wire connection last.

5. MAINTENANCE, MALFUNCTIONS, POSSIBLE CAUSES AND REMEDIES

Do not perform any repairs on your device. Return the device to ebm-papst for repair or replacement.

WARNING
Terminals and connections have voltage even with a unit that is shut off
Electric shock

→ Wait five minutes after disconnecting the voltage at all poles before opening the device.

CAUTION
The motor restarts automatically when operating voltage is applied, e.g. after a power failure.
Danger of injury

→ Keep out of the danger zone of the device.

→ When working on the device, switch off the mains supply voltage and secure the latter from being switched on again.

→ Wait until the device stops.

If the device remains out of use for some time, e.g. when in storage, we recommend switching the device on for at least two hours to allow any condensate to evaporate and to move the bearings.

Malfunction/error	Possible cause	Possible remedy
Impeller running roughly	Imbalance in rotating parts	Clean the device; if imbalance is still evident after cleaning, replace the device. If you have attached any weight clips during cleaning, make sure to remove them afterwards.
Motor does not turn	Mechanical blockage	Switch off, de-energise, and remove mechanical blockage.
	Mains supply voltage faulty	Check mains supply voltage, restore power supply.
	Faulty connection	De-energise, correct connection, see connection diagram.
	Unacceptable operating point	Check operating point
Overtemperature of motor	Ambient temperature too high	Lower ambient temperature if possible
	Insufficient cooling	Improve cooling

If you have any other problems, contact ebm-papst.

Translation of the original operating instructions

ebm-papst Mulfingen GmbH & Co. KG · Bachmühle 2 · D-74673 Mulfingen · Phone +49 (0) 7938 81-0 · Fax +49 (0) 7938 81-110 · info1@de.ebmpapst.com · www.ebmpapst.com

5.1 Cleaning

To ensure a long service life, the fans have to be regularly checked for proper operation and degree of soiling. The frequency of the checks is to be adapted to the occurrence of soiling.

DANGER
Risk of injury from rotating fan.
→ Only clean when not in motion. Interrupt the power supply, secure against renewed switch-on. Secure against start-up, prevent air flow.

⇒ Dirt deposits on the motor housing could lead to overheating of the motor.

⇒ Dirt on the impeller can cause vibration which would shorten the service life of the fan.

⇒ Severe vibration could destroy the fan.

⇒ In such cases immediately switch off and clean the fan.

⇒ The preferred method of cleaning is dry cleaning, e.g. using compressed air.

⇒ Use is never to be made of corrosive cleaning agents!

NOTE
Damage to the device during cleaning
Malfunction possible
→ Do not clean the device using a water jet or high-pressure cleaner.
→ Do not use any acid, alkali or solvent-basedcleaning agents.
→ Do not use any pointed or sharp-edged objects for cleaning

⇒ Completely remove any cleaning agents used.

⇒ Immediately switch off and replace the device if severe corrosion is apparent at load-bearing or rotating parts.

⇒ Repairs to load-bearing or rotating parts are not permissible!

⇒ Operate the fan for 2 hours at maximum speed to permit the evaporation of any water which may have ingressed.

⇒ If cleaning does not eliminate vibration, the fan may have to be re-balanced. In such cases please contact ebm-papst.

⇒ The fan is provided with maintenance-free ball bearings. The lifetime lubrication of the ball bearings is designed for a service life of 40,000 hours.

⇒ Please contact ebm-papst if bearing replacement is required after this period.

⇒ Adapt the maintenance intervals to the dust pollution occurring.

5.2 Safety test

What has to be tested?	How to test?	Frequency	Which measure?
Check the protective casing against accidental contact for damage and to ensure that it is intact	Visual inspection	At least every 6 months	Repair or replacement of the device
Check the device for damage to blades and housing	Visual inspection	At least every 6 months	Replacement of the device
Mounting the connection lines	Visual inspection	At least every 6 months	Fasten
Mounting of protective earth connection	Visual inspection	At least every 6 months	Fasten
Check the insulation of the wires for damage	Visual inspection	At least every 6 months	Replace wires
Condensate discharge holes for clogging, as necessary	Visual inspection	At least every 6 months	Open bore holes
Weld seams for crack formation	Visual inspection	At least every 6 months	Replace device
Abnormal bearing noise	acoustic	At least every 6 months	Replace device

5.3 Disposal

For ebm-papst, environmental protection and resource preservation are top priority corporate goals.
ebm-papst operates an environmental management system which is certified in accordance with ISO 14001 and rigorously implemented around the world on the basis of German standards.
Right from the development stage, ecological design, technical safety and health protection are fixed criteria.
The following section contains recommendations for ecological disposal of the product and its components.

5.3.1 Country-specific legal requirements

NOTE
Country-specific legal requirements
Always observe the applicable country-specific legal regulations with regard to the disposal of products or waste occurring in the various phases of the life cycle. The corresponding disposal standards are also to be heeded.

5.3.2 Disassembly

Disassembly of the product must be performed or supervised by qualified personnel with the appropriate technical knowledge.
The product is to be disassembled into suitable components for disposal employing standard procedures for motors.

WARNING
Heavy parts of the product may drop off. Some of the product components are heavy. These components could drop off during disassembly.
This can result in fatal or serious injury and material damage.
→ Secure components before unfastening to stop them falling.

Translation of the original operating instructions

ebm-papst Mulfingen GmbH & Co. KG · Bachmühle 2 · D-74673 Mulfingen · Phone +49 (0) 7938 81-0 · Fax +49 (0) 7938 81-110 · info1@de.ebmpapst.com · www.ebmpapst.com

5.3.3 Component disposal

The products are mostly made of steel, copper, aluminium and plastic. Metallic materials are generally considered to be fully recyclable.
Separate the components for recycling into the following categories:

- Steel and iron
- Aluminium
- Non-ferrous metal, e.g. motor windings
- Plastics, particularly with brominated flame retardants, in accordance with marking
- Insulating materials
- Cables and wires
- Electronic scrap, e.g. circuit boards

Only ferrite magnets and not rare earth magnets are used in external rotor motors from ebm-papst Mulfingen GmbH & Co. KG.

⇒ Ferrite magnets can be disposed of in the same way as normal iron and steel.

Electrical insulating materials on the product, in cables and wires are made of similar materials and are therefore to be treated in the same manner.
The materials concerned are as follows:

- Miscellaneous insulators used in the terminal box
- Power lines
- Cables for internal wiring
- Electrolytic capacitors

Dispose of electronic components employing the proper procedures for electronic scrap.

→ Please contact ebm-papst for any other questions on disposal.

Translation of the original operating instructions

ebm-papst Mulfingen GmbH & Co. KG · Bachmühle 2 · D-74673 Mulfingen · Phone +49 (0) 7938 81-0 · Fax +49 (0) 7938 81-110 · info1@de.ebmpapst.com · www.ebmpapst.com