DEVR60 Series
HVDC Contactor 1000A / 1000VDC



- HVDC 1000A carry current
- Max. switching current = 3300A
- Contacts sealed in inert gas
- Magnet arc blowout
- Coil economiser as standard
- Auxiliary contact option
- Male or female power terminals

UK CA CE RoHS Compliant ✓

Contacts

Contact arrangement		SPST-NO-DM
Contact material		T2+Ag
Max. switching voltage	AC/DC	1000VDC
Rated load	DC1	600A 1000VDC (break only above 600A)
Max. continuous thermal current	600s	1000A (with 300mm² conductors)
	60s	1000A (with 200mm² conductors)
	20s	1500A (with 300mm² conductors)
Max switching current	1 time only	3300A 320VDC
Initial contact resistance	max.	0.2mΩ (under rated current)
Auxiliary contact (when fitted)	arrangement	SPST-NO (1 Form A)
	max. current	2A @ 30VDC / 3A @ 125VAC
	min. current	100mA @ 5VDC

Coil

Nominal voltage (see page 2)	DC	12 ...36VDC (with coil economiser)
Rated power consumption	hold	1.2W @ 12VDC

Insulation

Insulation resistance	initial	100MΩ (Min.)
	life end	50MΩ (Min.)
Dielectric strength	coil to contact	4000Vrms / 1mA / 1 min (at sea level)
	contact to contact	4000Vrms / 1mA / 1 min (at sea level)

General Data

Operate / bounce time at 20°C	max.	40ms / 5ms
Release time	max.	20ms
Electrical life	ops.	Voltage and current dependent - see fig. 1
Mechanical life	ops.	2 x 10^5

Environmental

Environmental sealing	IP rating	Contacts are inside hermetically sealed can,
		economiser is protected by dust cover only.
Ambient temperature	operating	-40 to +85°C
Relative humidity		5 to 85%RH
Shock resistance		20G peak, 11ms 1/2 sine
Vibration resistance		100G sine peak (80 to 2000Hz)
Dimensions	L x W x H	78 x 67 x 104.5mm (approx.)
Weight	approx.	800g

Ordering Code

D E V R 6 0 - 5 0 6 1 - S 8 - 1 2 3 6 - R 1

Series

Coil code:
See table 1

Contact material
50: T2+Ag

Contact arrangement
61: SPST-NO
71: SPST-NO + Auxiliary

Mounting & terminations
Bottom flange mounting base
S8: M10 male stud power terminals
S9: M8 female power terminals
Coil & auxiliary contacts by flying leads

Coil wire length
R: 14.96" (380mm)
T: 5.9" (150mm)

Coil wire & auxiliary contact termination
1: None
2: Yazaki 7282-5558-10 Male
3: Molex Micro-Fit 43645-0200
Other terminations to special order

Specifications are subject to change without notice. E&OE.

Coil Data — Table 1

Coil code	Nominal voltage (VDC)	Must operate voltage max. (VDC)	Max. allowable voltage (VDC)	Must release voltage min. (VDC)	Inrush current max. (A)	Hold voltage min. (VDC)	Holding current (average)
1236	12 - 36	9	36	6	2.32	7.5	100mA@12VDC 50mA @ 24VDC

Coil economiser standard, no additional coil surge suppression required.

Other voltages available upon special request and subject to minimum quantity.

Electrical Performance — Fig. 1

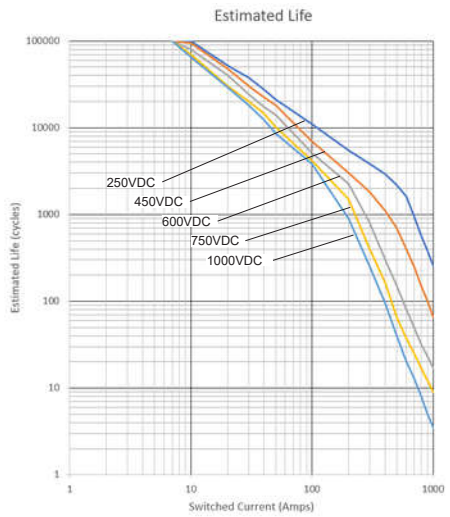

Estimates are based on tests and extrapolated data.
The user is advised to confirm the performance in their application.

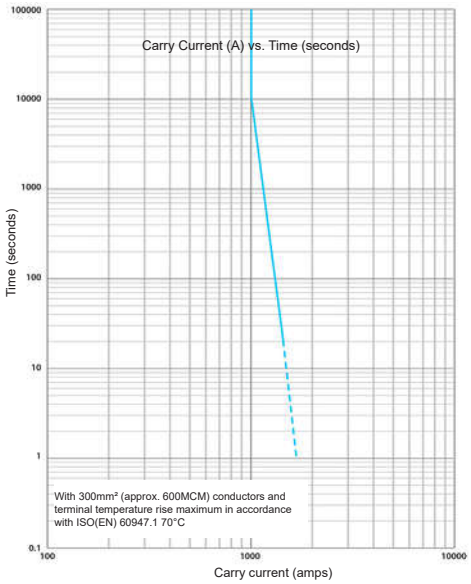

Circuit Diagram — Fig. 2

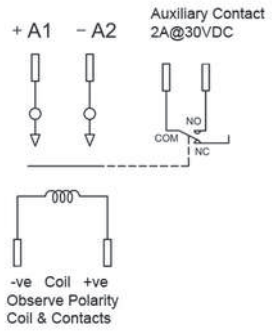

Shown with optional auxiliary contact

Dimensions — Fig. 2

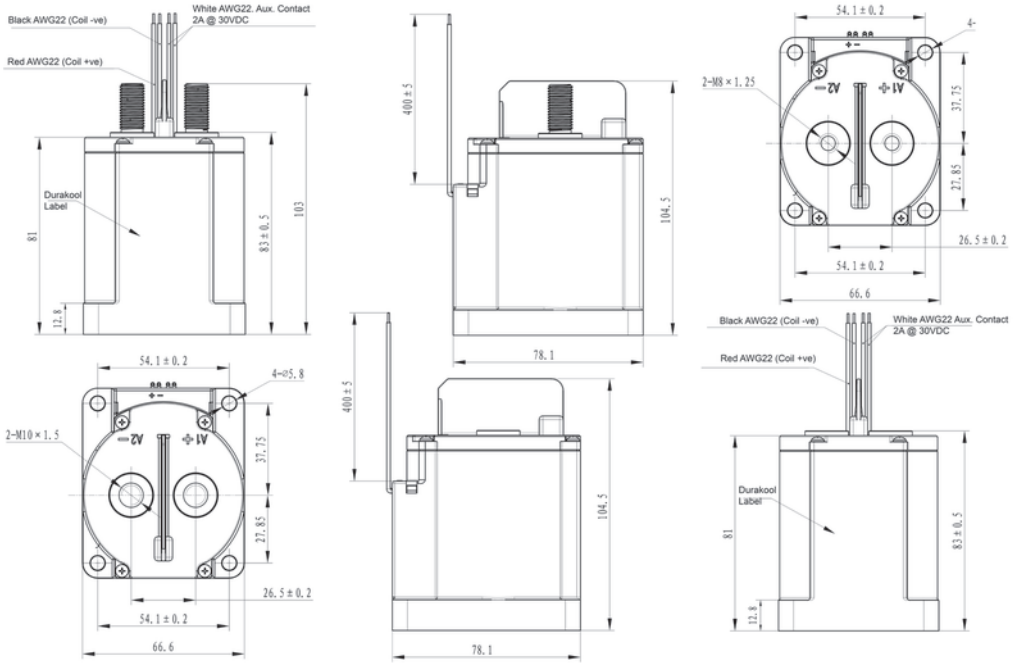

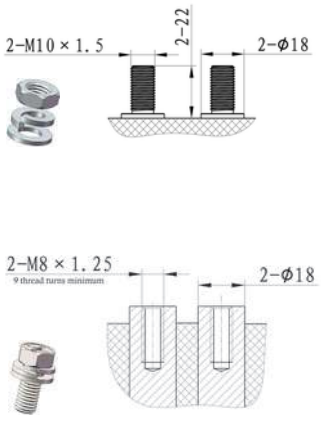

Notes:
1: Note coil polarity
2: Polarity sensitive type: Observe contact polarity as indicated
Contactor life will be severely reduced if incorrectly connected.
3: Nominal dimensions in mm.
4: Tolerances (nominal), <10mm: ± 0.3mm, 10 ~ 50mm: ± 0.6mm, >50mm: ± 1.0mm.
5: Coil wire length and terminations can be customised upon request.

Female Power Terminals
Recommended Terminal Screws (not supplied):
M8 x 1.25 x 16mm
M8 spring washer
M8 flat washer

Recommended Minimum Conductor
200mm².
Preferred conductor: 300mm²

Torque Settings
Terminals: 9.0-12.0Nm
Base Mounting: 1.8 to 3.8Nm

Specifications are subject to change without notice. E&OE.