CO_2 DISPLAY



MONITORING OF INDOOR AIR QUALITY

- Measures and records CO_2, relative humidity and temperature
- Accuracy ±2.5 %RH / ±0.3 K / ±30 ppm + 5% of measured value
- ROTRONIC HYGROMER® IN-1 humidity sensor
- 18,000 data point memory for CO_2, humidity and temperature values
- Display of date and time
- Adjustable, visual CO_2 indicator
- Large, easy-to-read display
- USB access for data download



rotronic
MEASUREMENT SOLUTIONS

CO_2 DISPLAY

BE PRECISE:
THE MAIN ADVANTAGES AT A GLANCE

The wall-mounted or bench-top CO_2 display is the latest development of an inexpensive display unit that simultaneously measures and records CO_2, humidity and temperature. Equipped with the field-tested ROTRONIC HYGROMER® IN-1 humidity sensor, this instrument offers unbeatable value for money. The instrument can be configured directly with buttons and stored data can be exported to a USB stick for analysis with the free ROTRONIC software package SW21.

Features
- Display for mounting on walls or bench-top use
- Data recording function



Display
- Large, easy-to-read display of measured values
- CO_2 indicator for quick recognition of air quality (GOOD/NORMAL/POOR)
- REC LED to indicate data recording is in progress
- Display of date and time

Use
- Readily accessible buttons for easy use



Connections
- USB access for data downloads
- 12 VDC power supply

Humidity Sensor and Calibration
- HYGROMER® IN-1 humidity sensor
- Calibration of humidity possible at 35/80 %RH



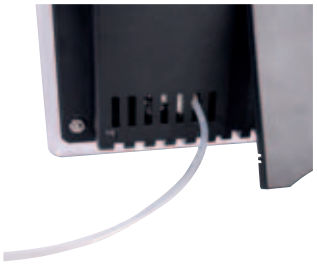

CO_2 Sensor and Calibration
- NDIR sensor with automatic calibration
- Calibration of CO_2 at 0/400 ppm or any value between 0 and 990 ppm

CO_2 DISPLAY

APPLICATIONS

Indoor **A**ir **Q**uality



Classrooms, Kindergartens

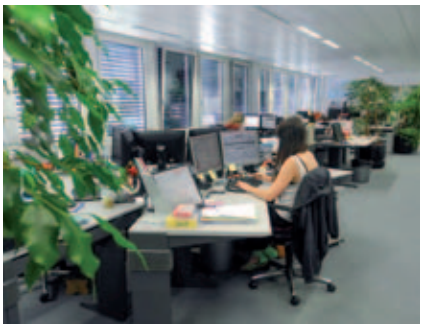

Meeting Rooms, Open-Plan Offices



Shopping Centers, Fitness Studios

PRINCIPLES

The wall-mounted or bench-top CO_2 display evaluates the quality of air with a combined measurement of CO_2, humidity and temperature. A high concentration of carbon dioxide can develop quickly when closed rooms with deficient ventilation are filled with people. Carbon dioxide (CO_2) is a colorless and odorless gas that exists in the earth's atmosphere and which is dangerous in high concentrations. The proportion of CO_2 in natural ambient air is about 0.04 % or 400 ppm. When humans and animals exhale this gas, it mixes quickly with the ambient air. A high CO_2 content becomes apparent in humans through rapid fatigue and loss of concentration. The negative effects become noticeable that more quickly in small rooms in which there are many people (e.g. conference rooms). In order to initiate suitable countermeasures such as an increase in the supply of fresh air, it is important to measure not only parameters such as relative humidity and temperature, but also the CO_2 content.

Guidelines

350 - 450 ppm 0.035 - 0.045 %vol	600 - 1,200 ppm 0.06 - 0.12 %vol	›1,000 ppm ›0.1 %vol	5,000 ppm 0.5 %vol	38,000 ppm 3.8 %vol	›100,000 ppm 10 %vol
Fresh air outdoors	Room air	Fatigue and loss of concentration become apparent	Maximum permissible value at the workplace during an 8-hour workday	Breathing air (direct exhalation)	Nausea, vomiting, loss of consciousness and death

TECHNICAL INFORMATION

Dimensions

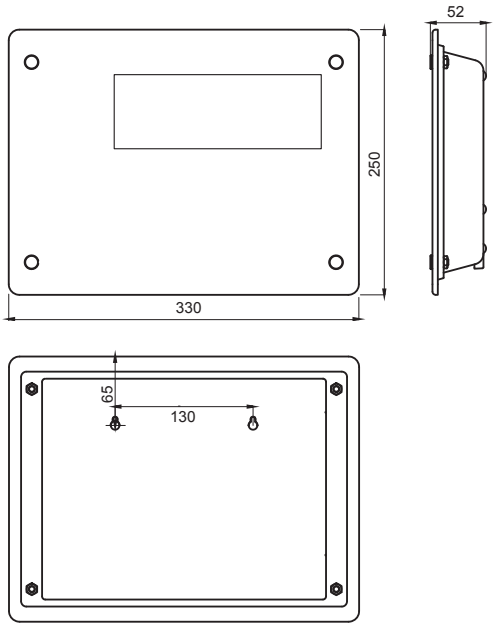

Suitable Accessories

Art. No.	Description
ER-15	Humidity calibration device
EA35-SCS	Humidity standard 35 %RH
EA80-SCS	Humidity standard 80 %RH
CO2 CALIBRATOR	Zero calibration kit

General	
Type	Wall or bench-top display
Parameters	CO_2, relative humidity and temperature
Range of application	0...50 °C / 0...95 %RH, non-condensing
Power supply	AC adapter 12 VDC
Clock	Real time clock
Alarm/Indicator	Adjustable for CO_2 measurement
Technical Information / Functions	
Current consumption	700 mA (max)
Warm-up time	‹1 min.
Memory capacity	18,000 values with time stamp, automatic recording (%RH / °C / ppm)
CO_2 Measurement	
Measurement principle	Infrared (NDIR) with automatic calibration (ABC)
Measurement range	0...5000 ppm
Accuracy at 23 °C ±5 K	±30 ppm ±5 % of the measured value
Response time	‹3 min. diffusion time
Adjustment points	0, 400 ppm or any value between 0 and 990 ppm
Pressure dependence	+1.6 % reading per kPa
Null drift	‹10 ppm/year
Maintenance	No maintenance (standard indoor application)
Humidity Measurement	
Humidity sensor	ROTRONIC HYGROMER® IN-1
Measurement range	0...100 %RH
Accuracy at 23 °C ±5 K	‹2.5 %RH (10...90 %RH)
Adjustment points	35, 80 %RH
Response time τ63	‹30 s, without filter
Long-term stability	‹1.5 %RH / year
Temperature Measurement	
Sensor	NTC
Measurement range	-20...60 °C
Accuracy at 23 °C ±5 K	±0.3 °K
Response time	4 s
Software	
As download (SW21) www.rotronic.com	Display and evaluation of the measured values
Conformities / Housing	
CE / EMC compatibility	CE conformant 2004/108/EC
Housing material	ABS
Dimensions	330 x 250 x 50 mm
Weight	1400 g

rotronic
MEASUREMENT SOLUTIONS

ROTRONIC AG, Grindelstrasse 6, CH - 8303 Bassersdorf, Tel. +41 44 838 11 11, Fax +41 44 836 44 24, www.rotronic.ch
ROTRONIC Instruments (UK) Ltd, Crompton Fields, Crompton Way, Crawley, West Sussex, RH10 9EE, UK, Phone +44 (0)1293 571000, Fax +44 (0)1293 571008, www.rotronic.co.uk
ROTRONIC Instrument Corp, 135 Engineers Road, Hauppauge, NY 11788, USA , Phone, +1 631 427-3898, Fax, +1 631 427-3902, www.rotronic-usa.com

59039E/2013-09