Accessories: ø 22mm

► LEGEND PLATES - FRAMES ONLY

ROUND	Standard model	Part Number



LWP3

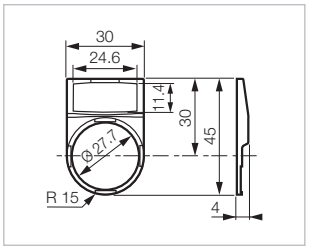

For use with standard model legend plate inserts

● Black **LWP3**

ROUND	Large model



LWG3

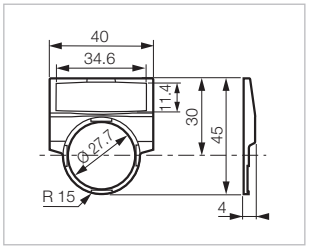

For use with large model legend plate inserts

● Black **LWG3**

SQUARE	Standard model



LWP4

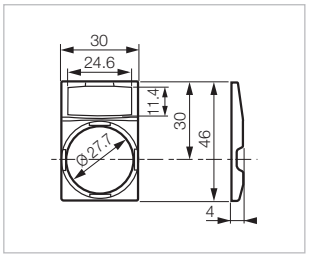

For use with standard model legend plate inserts

● Black **LWP4**

FOR DOUBLE AND TRIPLE TOUCH	Standard model



LWP2

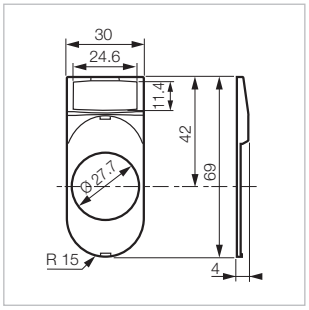

For use with standard model legend plate inserts

● Black **LWP2**