7310 BECBP

Popular item
SKF Explorer

Dimensions

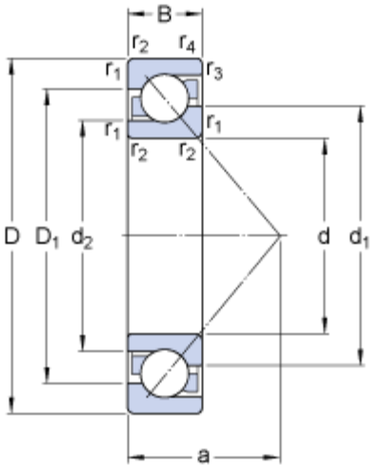

d		50	mm
D		110	mm
B		27	mm
d_1	≈	73.8	mm
d_2	≈	61.13	mm
D_1	≈	88.8	mm
a		47	mm
$r_{1,2}$	min.	2	mm
$r_{3,4}$	min.	1	mm

Abutment dimensions

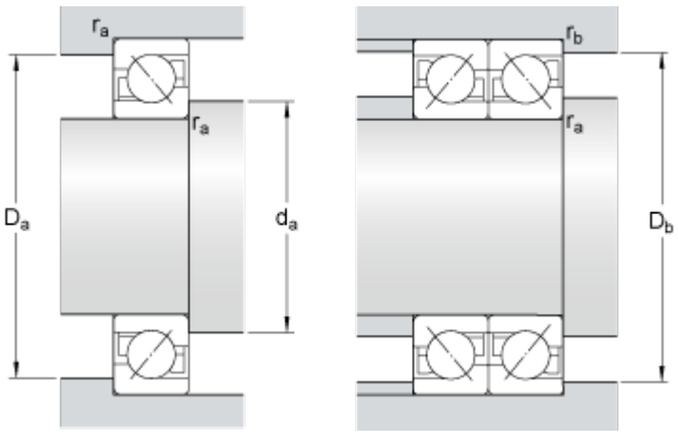

d_a	min.	61	mm
D_a	max.	99	mm
D_b	max.	104	mm
r_a	max.	2	mm
r_b	max.	1	mm

Calculation data

Basic dynamic load rating	C	75	kN
Basic static load rating	C_0	51	kN
Fatigue load limit	P_u	2.16	kN
Reference speed		7500	r/min
Limiting speed		8000	r/min
Calculation factor	A	0.0418	
Calculation factor	k_r	0.1	
Calculation factor	e	1.14	

Single bearing or bearing pair arranged in tandem

Calculation factor	X	0.35	

Calculation factor	Y_0	0.26
Calculation factor	Y_2	0.57

Bearing pair arranged back-to-back or face-to-face

Calculation factor	X	0.57
Calculation factor	Y_0	0.52
Calculation factor	Y_1	0.55
Calculation factor	Y_2	0.93

Mass

Mass bearing	1.1	kg