MURR ELEKTRONIK
stay connected

7/8" FEMALE FLANGE PLUG

Wire 5X0.75 0.5m

Flange 7/8" female
with multi-strand wire
5-pole

Link to Product

Illustration



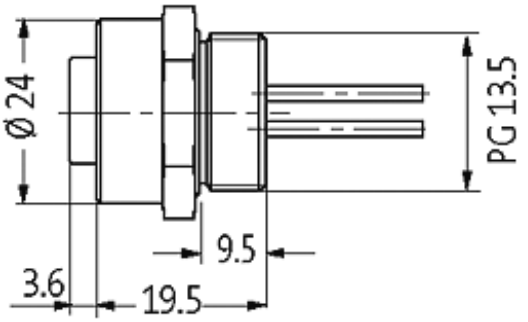

The information in this brochure has been compiled with the utmost care.
Liability for the correctness completeness and topicality of the information is restricted to gross negligence. Version: 11/14

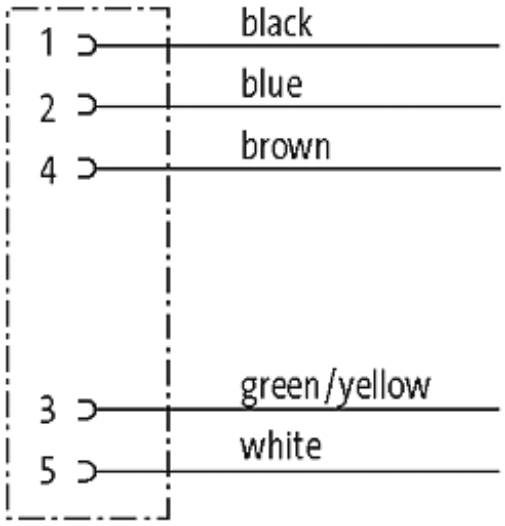

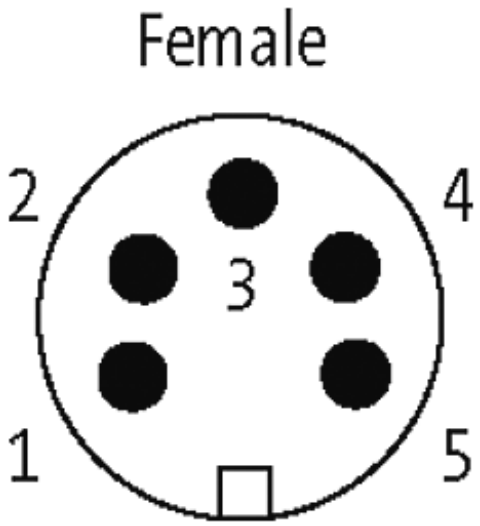

Product may differ from Image

Form	
	78381

Technical Data	
Operating voltage	max. 230/400 V AC/DC
Operating current per contact	max. 9 A
Locking of ports	Screw thread 7/8" (recommended torque 1.5 Nm) self-securing
Protection	IP67 inserted and tightened (EN 60529)
Connection	pre-wired with PVC-wire isolation, (UL/CSA)

Cables	
Cable number	978
No./diameter of wires	5 × AWG18
Wire isolation	PVC (br, wh, bl, bk, gnye)
Shore hardness outer jacket	75 ± 5A
Material (wire)	UL-Listed
Bend radius (fixed)	10 × outer diameter

The information in this brochure has been compiled with the utmost care.
Liability for the correctness completeness and topicality of the information is restricted to gross negligence. Version: 11/14

Bend radius (moving)	15 × outer diameter
Temperature range (fixed)	-25...+85 °C
Temperature range (mobile)	-10...+50 °C
General data	
Temperature range	-25...+85 °C
Commercial data	
country of origin	DE
customs tariff number	85444290
minimum order quantity	1

The information in this brochure has been compiled with the utmost care.
Liability for the correctness completeness and topicality of the information is restricted to gross negligence. Version: 11/14