THE INFORMATION CONTAINED IN THIS DRAWING IS THE SOLE PROPERTY OF L-COM, INC. ANY REPRODUCTION IN PART OR WHOLE WITHOUT THE WRITTEN PERMISSION OF L-COM, INC. IS PROHIBITED.

REVISIONS

REV	DESCRIPTION	DATE	APPROVED
A	INITIAL RELEASE	06/22/17	J.LABOY

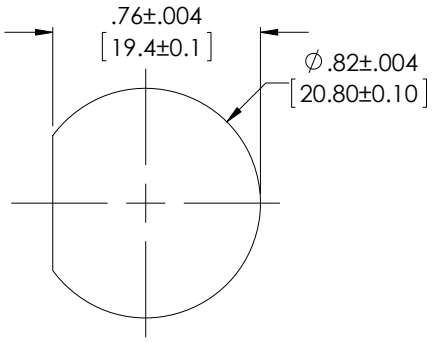

RECOMMENDED PAMEL CUT-OUT

WITH WATERPROOF CAP OR DUST CAP
PANEL THICKNESS MAX:.110[2.8]
WITHOUT WATERPROOF CAP OR DUST CAP
PANEL THICKNESS MAX:.157[4.0]

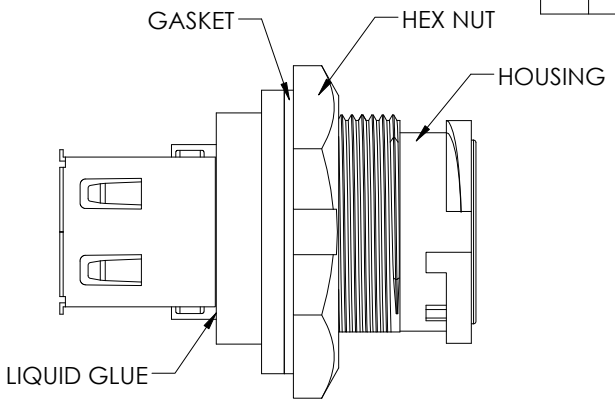

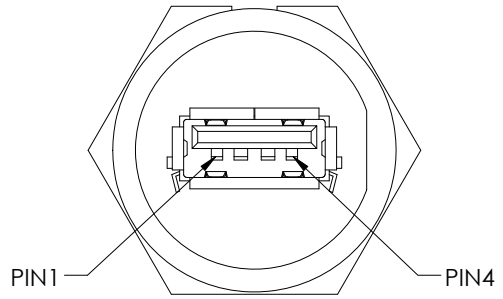

J1
USB2.0 JACK
CONTACTS GOLD PLATED

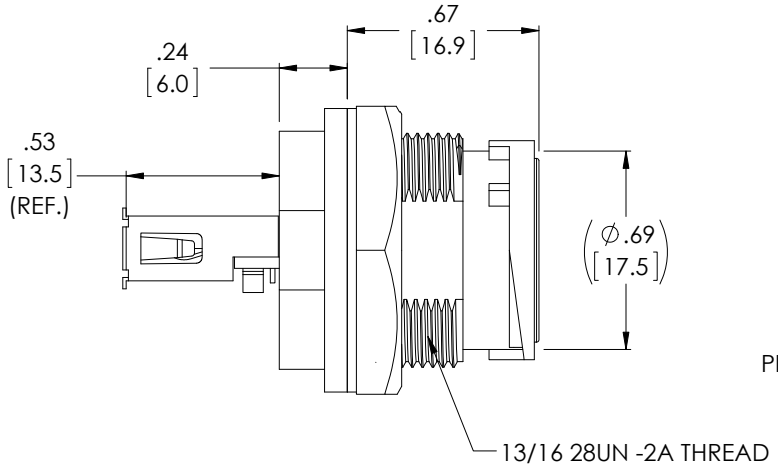

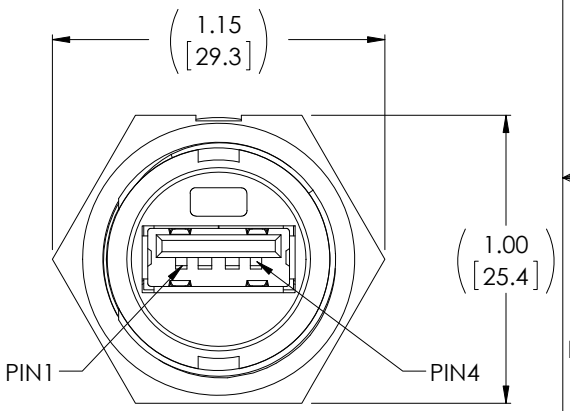

J2
USB2.0 WATERPROOF JACK
CONTACTS GOLD PLATED

NOTES:

1. ADAPTER SHALL BE TESTED FOR CONTINUITY.
2. WATERPROOF RATE :IP67
3. ADAPTER SHALL BE INDIVIDUALLY PACKAGED IN ACCORDANCE WITH L-COM SPECIFICATION PS-0031.

REGULATORY COMPLIANCE:
CE2011/65/EU(RoHS DIRECTIVE)

UNLESS OTHERWISE SPECIFIED,
DIMENSIONS ARE IN INCHES [mm]
OVERALL CABLE LENGTH TOLERANCE:
≤12 [305] = +1 [25] / -0
>12 [305] ≤60 [1524] = +2 [51] / -0
>60 [1524] ≤120 [3048] = +4 [102] / -0
>120 [3048] ≤300 [7620] = +6 [152] / -0
>300 [7620] = +5% / -0%
ALL OTHER DIMENSIONAL TOLERANCES:
.X = ± .2 [5.08]
.XX = ± .02 [.51]
.XXX = ±.005 [.13]
PROJECTION

APPROVALS	DATE
DRAWN BY D.CUI	06/21/17
CHECKED BY B.ZHANG	06/21/17
APPROVED BY B.GATES	06/22/17

CONFIGURATION DETAILS OF UNDIMENSIONED FEATURES MAY VARY

COLOR VARIATIONS MAY OCCUR

L-COM Global Connectivity
50 HIGH STREET
NORTH ANDOVER, MA
01845

CATEGORY
USB 2.0

PRODUCT DESCRIPTION
WATERPROOF USB A PANEL JACK FF

SIZE	FSCM NO.	DWG. NO.	REV.
A	43321	U2C00003	A

SCALE: NONE | CAD FILE: U2C00003.SLDDRW | SHEET 1 OF 1