Short-stroke cylinder, Series KHZ

0822010532

2024-04-09

AVENTICS Series KHZ Short-stroke cylinders

The AVENTICS Series KHZ is a non-standard short-stroke cylinder ideal for tight installation spaces and ensure easy, safe integration in machinery.



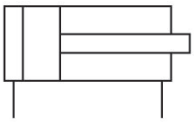

Technical data

Industry	Industrial
Piston Ø	25 mm
Stroke	15 mm
Ports	G 1/8
Functional principle	Double-acting
Cushioning	Elastic cushioning
Magnetic piston	Piston without magnet
Environmental requirements	Industry standard
Piston rod thread - type	Internal thread
Piston rod thread	M5
Piston rod	single
Scraper	Standard Industry Scraper
Pressure for determining piston forces	6,3 bar
Retracting piston force	260 N
Extracting piston force	309 N
Min. ambient temperature	-25 °C
Max. ambient temperature	80 °C
Min. working pressure	1 bar
Max. working pressure	10 bar
Impact energy	0.1 J
Weight 0 mm stroke	0.164 kg
Weight +10 mm stroke	0.03 kg

Short-stroke cylinder, Series KHZ

0822010532

Medium	Compressed air
~~Min. medium temperature~~	~~-25 °C~~
Max. medium temperature	80 °C
Max. particle size	50 µm
Min. oil content of compressed air	0 mg/m³
Max. oil content of compressed air	5 mg/m³

Material

Piston rod	Stainless Steel
Piston material	Nitrile rubber
Scraper material	Polyurethane
Material, front cover	Brass
Cylinder tube	Aluminum
End cover	Aluminum
Part No.	0822010532

Technical information

Other versions can be ordered from AVENTICS sales offices.

The pressure dew point must be at least 15 °C less than ambient and medium temperature and may not exceed 3 °C.

The oil content of compressed air must remain constant during the life cycle.

Use only the approved oils from AVENTICS. Further information can be found in the “Technical information” document (available in https://www.emerson.com/en-us/support).

Short-stroke cylinder, Series KHZ

0822010532

Dimensions

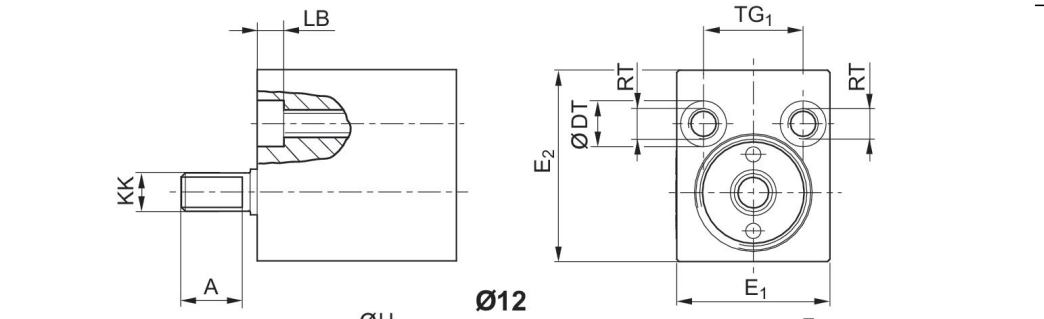

Ø12

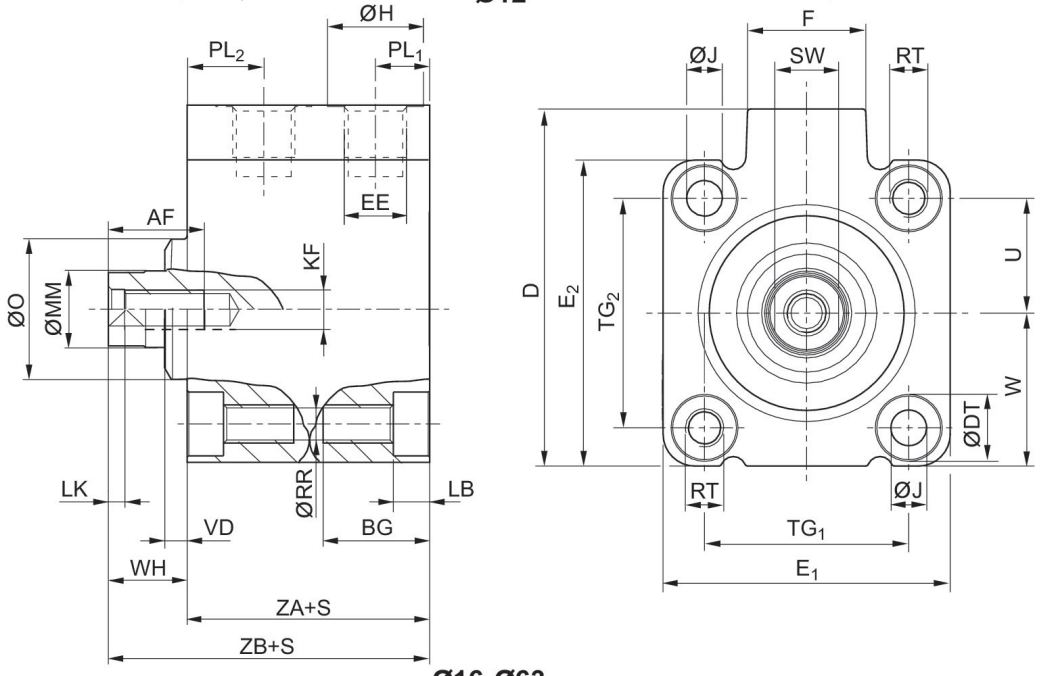

Ø16-Ø63

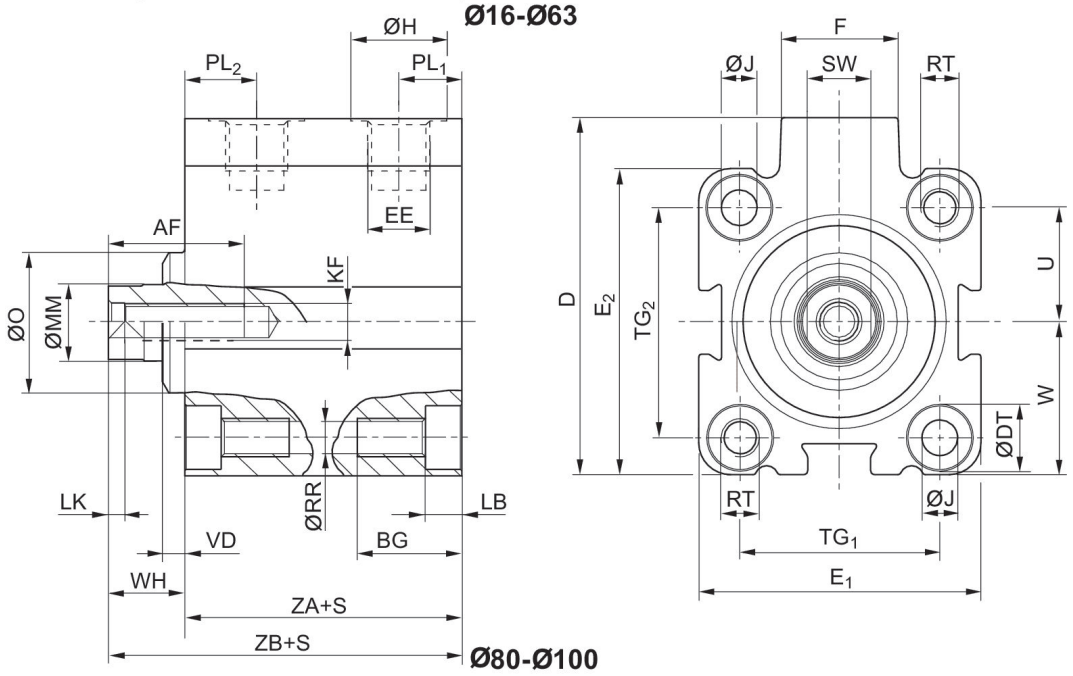

Ø80-Ø100

S = stroke

Short-stroke cylinder, Series KHZ

0822010532

Piston Ø	Stroke	A	AF +1	BG min.	D JS15	ØDT H13	E1 JS15	E2 JS15	EE
12	5 - 20	8	–	12.4	–	6	20	25	M 5
12	25 - 40	8	–	17.5	–	6	20	25	M 5
16	5 - 15	–	10	12.4	33	6	28	28	M 5
16	20 - 40	–	10	17.5	33	6	28	28	M 5
20	5 - 50	–	10	13.6	37	7.5	32	32	M 5
25	5 - 50	–	10	13.6	47.5	8	37	39	G 1/8
32	5 - 50	–	15	16.7	56	10	45	48	G 1/8
40	5 - 50	–	15	16.7	62.5	10	54.5	54.5	G 1/8
50	10 - 50	–	18	19.8	72	11	64	64	G 1/8
63	5 - 50	–	18	25	88	15	80	80	G 1/8
80	10 - 50	–	18	25	110	15	100	100	G 1/4
100	25 - 50	–	20	30	132	17.5	124	124	G 1/4

Piston Ø	F	ØH	ØJ	KF	KK	LB +0,4	LK +0,5	ØMM f8	ØO
12	–	8	–	–	M 5	3.4	–	6	–
12	–	8	–	–	M 5	8.5	–	6	–
16	11.5	8	3.55	M5	–	3.4	2	8	–
16	11.5	8	3.55	M5	–	8.5	2	8	–
20	11	8	4.55	M5	–	4.6	2	10	–
25	17.5	15	4.55	M5	–	4.6	2	10	20
32	18.5	15	5.5	M6	–	5.7	2.5	12	22
40	18.5	15	5.5	M6	–	5.7	2.5	12	30
50	18	15	7.3	M8	–	6.8	3.5	16	35
63	23	15	9.2	M8	–	9	3.5	16	35
80	27	19	9.2	M10	–	9	4	20	46
100	28	19	11	M12	–	11	4	25	56

Piston Ø	PL1	PL2	ØRR	RT	SW -0,3	TG1	TG2	U	W
12	6	9.5	3.3	M4	–	13 ±0,2	–	9	9 ±0,2
12	6	9.5	3.3	M4	–	13 ±0,2	–	9	9 ±0,2
16	6	11.3	3.3	M4	7	20 ±0,2	20 ±0,2	10	14 ±0,2
16	6	11.3	3.3	M4	7	20 ±0,2	20 ±0,2	10	14 ±0,2
20	5	8	4.2	M5	8	22 ±0,2	22 ±0,2	11	16 ±0,2
25	9	11	4.2	M5	8	26 ±0,25	28 ±0,25	14	19,5 ±0,2
32	8.5	12	5.05	M6	10	32 ±0,25	36 ±0,25	18	24 ±0,2
40	9	11	5.05	M6	10	40 ±0,25	40 ±0,25	20	27,3 ±0,2
50	8.5	11	6.8	M8	13	50 ±0,25	50 ±0,25	25	32 ±0,2
63	8.5	12.5	8.5	M10	13	62 ±0,25	62 ±0,25	31	40 ±0,2
80	13	16	8.8	M10	17	82 ±0,3	82 ±0,3	41	50 ±0,3
100	15.5	15.5	10.2	M12	22	103 ±0,3	103 ±0,3	51.5	62 ±0,3

Piston Ø	VD -1	WH	ZA ±0,2	ZB ±0,8
12	–	–	21	31
12	–	–	21	31

Short-stroke cylinder, Series KHZ

0822010532

Piston Ø	VD -1	WH	ZA ±0,2	ZB ±0,8
16	–	6	25	31
16	–	6	25	31
20	–	9.5	24.5	34
25	3.5	11.5	31	42.5
32	3.5	12.5	33	45.5
40	4.5	15	33	48
50	6	17	32.5	49.5
63	6.5	17	35.5	52.5
80	8.5	18	42	60
100	7	20	49.5	69.5

Overview drawing

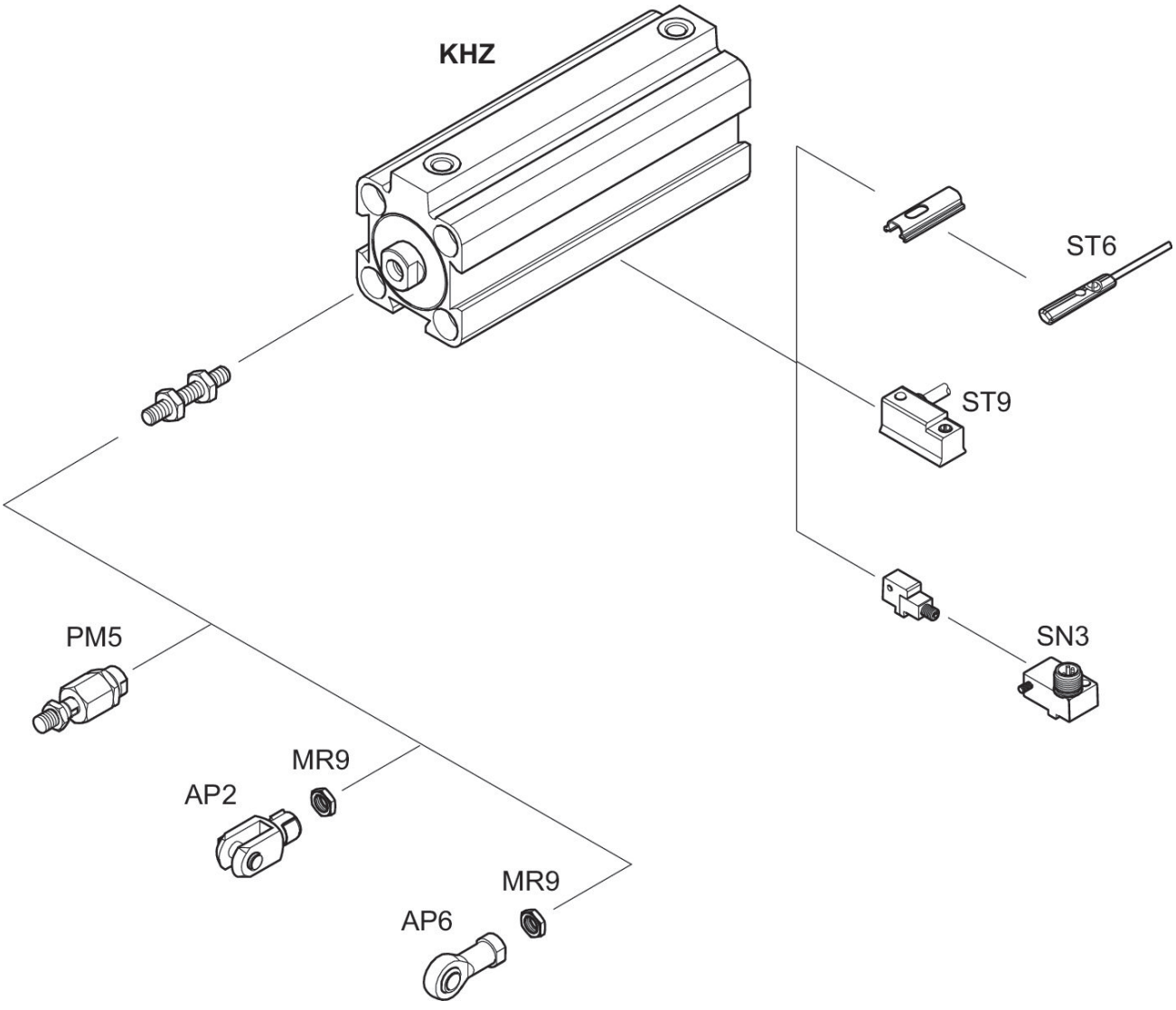

NOTE: This overview drawing is only for orientation to indicate where the various accessory parts can be fastened to the cylinder. The illustration has been simplified for this purpose. It is thus not possible to derive the dimensions from this overview.