3303 A-2RS1TN9/MT33

Popular item

Dimensions

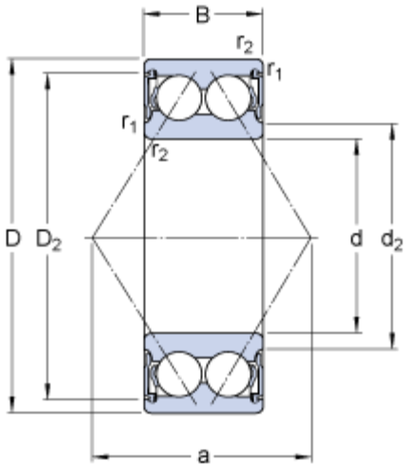

d		17	mm
D		47	mm
B		22.2	mm
d_2	≈	25.7	mm
D_2	≈	40.15	mm
$r_{1,2}$	min.	1	mm
a		28	mm

Abutment dimensions

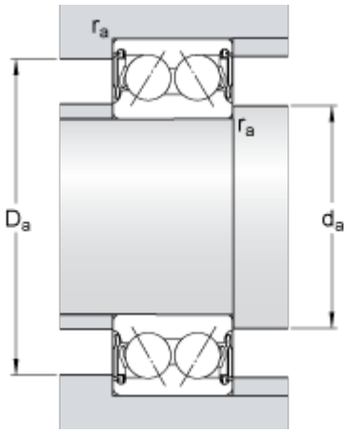

d_a	min.	22.6	mm
d_a	max.	25.5	mm
D_a	max.	41.4	mm
r_a	max.	1	mm

Calculation data

Basic dynamic load rating	C	21.6	kN
Basic static load rating	C_0	12.7	kN
Fatigue load limit	P_u	0.54	kN
Limiting speed		11000	r/min
Calculation factor	k_r	0.07	
Calculation factor	e	0.8	
Calculation factor	X	0.63	
Calculation factor	Y_0	0.66	
Calculation factor	Y_1	0.78	
Calculation factor	Y_2	1.24	

Mass

Mass bearing	0.18	kg