Brand of NTN corporation

Technical data



6314EE

Single row deep groove ball bearings

Deep groove ball bearing, radial contact, pressed steel cage, contact seals on both sides

VISUAL (S)

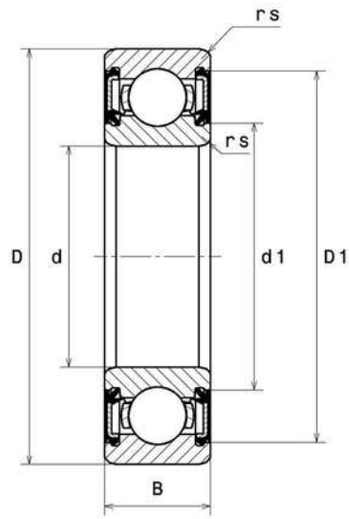

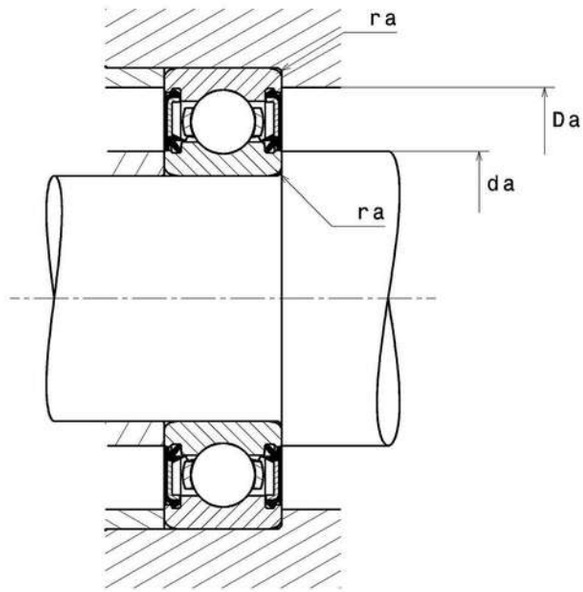

NTN Europe
1 rue des Usines · BP 2017 · 74010 Annecy Cedex · France · Tel. +33 (0)4 50 65 30 00
S.A. au capital de 322 639 919 € · RCS ANNECY B 325 821 072 · Id. Fiscale : FR 48 325 821 072
SIRET 325 821 072 00015 · Code APE 2815 Z · Code NACE 28.15

6314EE
Single row deep groove ball bearings

PRODUCT DEFINITION	
Brand	SNR
d - Internal diameter	70 mm
D - External diameter	150 mm
B - Bearing/Inner ring width	35 mm
d1 - External diameter inner ring	92,4 mm
D1 - Inner diameter outer ring	128,3 mm
rs - Min fillet radius	2,1 mm
Radial clearance class	CN
Mass	2,56 kg

PRODUCT PERFORMANCE	
C - Dynamic load	110000000 mN
C0 - Static load	68200000 mN
Cu - Fatigue limit load	2950000 mN
f0 - Coefficient	13.2
N lim - Mechanical Limit Speed	18600 °/s
Tmin - Min operating temperature	243,15 °K
Tmax - Max operating temperature	393,15 °K

BEARING FREQUENCIES	
BPFO - Over rolling frequency on outer ring (60 rpm)	3.076 Hz
BPFI - Over rolling frequency on inner (60 rpm)	4.924 Hz
BSF - Over rolling frequency on rolling element (60 rpm)	4.1 Hz
BRF - Rotational frequency – rolling element (60 rpm)	2.05 Hz
FTF - Rotational frequency - cage (60 rpm)	0.385 Hz

6314EE
Single row deep groove ball bearings

ABUTMENT	
da min - Min shoulder diameter IR	81 mm
da max - Max shoulder diameter IR	92,4 mm
Da max - Max shoulder diameter OR	139 mm
ra max - Max shaft & housing fillet radius	2 mm

INDUSTRY CALCUL FACTORS

Equivalent dynamic radial load

P = X.Fr + Y.Fa

$\frac{f_0 F_a}{C_0}$	e	Fa / Fr ≤ e		Fa / Fr > e	
		X	Y	X	Y
0.172	0.19	1	0	0.56	2.3
0.345	0.22				1.99
0.689	0.26				1.71
1.03	0.28				1.55
1.38	0.3				1.45
2.07	0.34				1.31
3.45	0.38				1.15
5.17	0.42				1.04
6.89	0.44				1

Equivalent static radial load

Po = Xo.Fr + Yo.Fa

X_0	Y_0
0.6	0.5

For single or DT bearing arrangement :

If Po <Fr, then use Po = Fr