TITLE	FUSE TESTER	DATE 1-20-95	NO. FT-2	REV. C
DWG./CK	PROD.ENG.		SUPERSEDES	
TCB/JS		COOPER Bussmann St. Louis, MO 63178	NO. FT-2 B	DATED 8-3-94

LETTERS IN CIRCLE INDICATE CHANGE FROM PRECEDING PRINT

K40217

E J 56

CONFIDENTIAL. THE INFORMATION CONTAINED IN THIS DOCUMENT IS THE PROPERTY OF COOPER INDUSTRIES,INC. IT IS NOT FOR PUBLIC DISCLOSURE. POSSESSION OF THE INFORMATION DOES NOT CONVEY ANY RIGHT TO LOAN, SELL OR DISCLOSE THE INFORMATION. UNAUTHORIZED REPRODUCTION OR USE OF THE INFORMATION IS PROHIBITED. THIS DOCUMENT IS TO BE RETURNED TO COOPER INDUSTRIES,INC. UPON COMPLETION OF THE PURPOSE FOR WHICH IT IS LOANED OR UPON REQUEST.

COPYRIGHT Cooper Industries,Inc.
This is an unpublished work. The disclosure of this work is limited to select personnel. Further dissemination or disclosure to the public is PROHIBITED. This unpublished work is protected by Federal Copyright law and all rights thereunder are reserved by Cooper Industries,Inc.

SCALE FULL

UNLESS OTHERWISE SPECIFIED TOLERANCES TO BE:
METRIC ±.38mm
DECIMAL ±.015"
ANGULAR ±2°

▲(0) INDICATES CRITICAL DIMENSION OR FEATURE 12700

SCHEMATIC DRAWING OF BUSSMANN UNIVERSAL FUSE TESTER
(12 VOLT AUTOMOTIVE / MARINE)
(24 VOLTS MAXIMUM)

PAGE 1 OF 4

(A) NO CHANGE

SEE PAGE 2 FOR MARKING DETAILS
AND PAGE 3 FOR SCHEMATIC DIAGRAM.

TERMINAL SPACING: MINI FUSE = $\frac{6.35}{.250}$

FRN-R 60 = $\frac{50.8}{2.000}$

TO BE SUPPLIED WITH 2 REPLACEABLE WAFER BATTERIES AND PROTECTIVE PULL STRIP INSTALLED BY VENDOR.

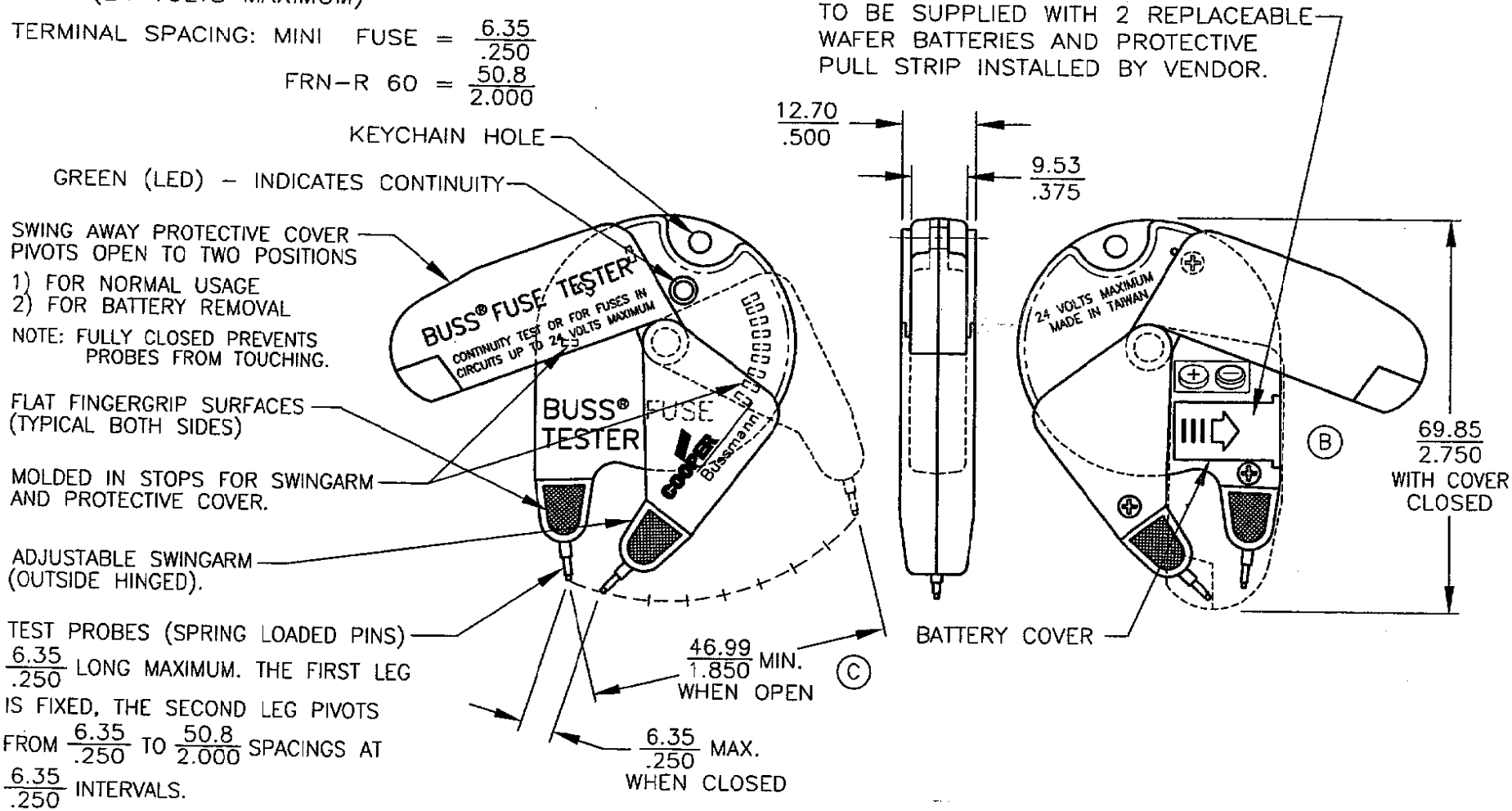

(C) MATERIAL: PC BAYER #6555
FLAMMABILITY RATING: 94 V-0
COLOR: YELLOW PMS 109