TENSATOR®

TC114 Topper

Create a more effective barrier than cones alone.

The innovative and simple topper transforms a series of standard traffic cones into an adaptable, cost-effective temporary barrier system for roadside, health & safety, maintenance and engineering applications. The Topper unit fits to the top of any standard cone and incorporates 3.65 metres of retractable webbing. By pulling the tape from one unit then connecting it to the top of another cone (placed up to 3.65 metres away) a temporary highly visible barrier is created.



Features

- Contains 3.65m of high visibility chevron webbing (red/white or blue/white and green/white, which is available to order) in each cassette, which connects cones together
- 4-way connectivity
- High visibility orange Topper
- Robust, hard wearing construction

Benefits

- Easy to use
- Instant, temporary cone barrier
- Durable & hardwearing dye print that does not scratch or deteriorate
- Cassette retracting system supported by a 1 year warranty
- Barrier is more effective than a simple road cone

Applications

- Ideal for construction sites, maintenance, warehousing companies and highways agencies.

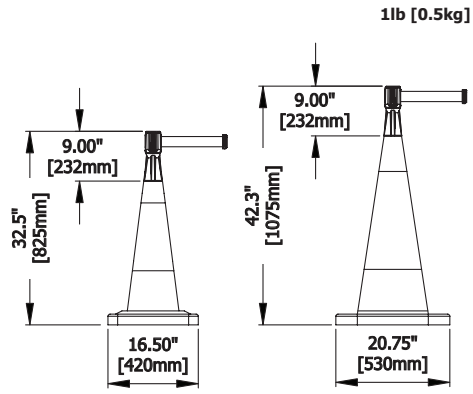

height	232mm	tube O.D.	N/A
base dia.	N/A	weight	0.5kg

Note: The topper & cone are sold separately.

The overall height is the sum of both the topper & cone.

MILTON KEYNES +44 1908 684600
NEW YORK +1 631 666 0300
DUBAI +971 4 2997228
PARIS +33 1 43 09 85 00
FRANKFURT +49 69 3003 890-0
WROCLAW +48 71 359 3800

www.tensatorgroup.com

Owing to the dynamic nature of our business, specifications are constantly being changed and therefore this literature is for informational purposes only. For the most up to date information, please visit our website www.tensatorgroup.com. Tensator makes no warranties, express or implied, in this document. E&OE.