20DAM SERIES LINEAR ACTUATORS

www.DanaherMotion.com

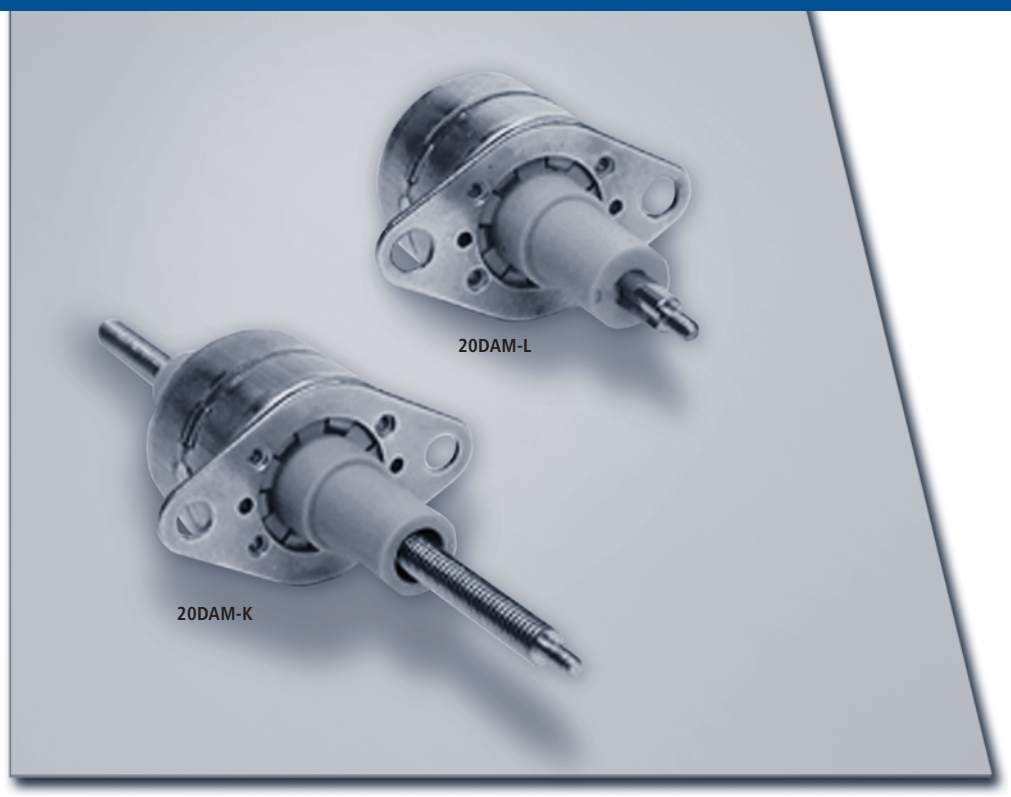

Portescap™

20DAM-K / 20DAM-L

FEATURES

- Linear force up to 108 oz (30N)
- Linear step resolution of .001", .002" and .004"
- Captive and non-captive versions
- Unipolar and bipolar coil constructions
- 5 or 12 volts power input

BENEFITS

- High resolution digital linear actuator
- Fast, powerful and precise positioning
- Industry standard frame size
- Customized designs available upon request
- Customization for extended travel and various step increments available

GENERAL SPECIFICATIONS

Max Pull-in Rate (Steps/Sec)	500
Power Consumption	2.5 Watts
Insulation Resistance	20MΩ
Bearings	Radial Ball
Weight	0.9 oz (25 gms)
Operating Temperature Range	-20°C – 70°C
Storage Temperature Range	-40°C – 85°C

Solutions by DANAHER MOTION

DANAHER MOTION is a trademark of Danaher Corporation. Danaher Motion makes every attempt to ensure accuracy and reliability of the specifications in this publication. Specifications are subject to change without notice. Danaher Motion provides this information "AS IS" and disclaims all warranties, express or implied, including, but not limited to, implied warranties of merchantability and fitness for a particular purpose.It is the responsibility of the product user to determine the suitability of this product for a specific application. ©2005 Danaher Motion.

Series 20DAM–K

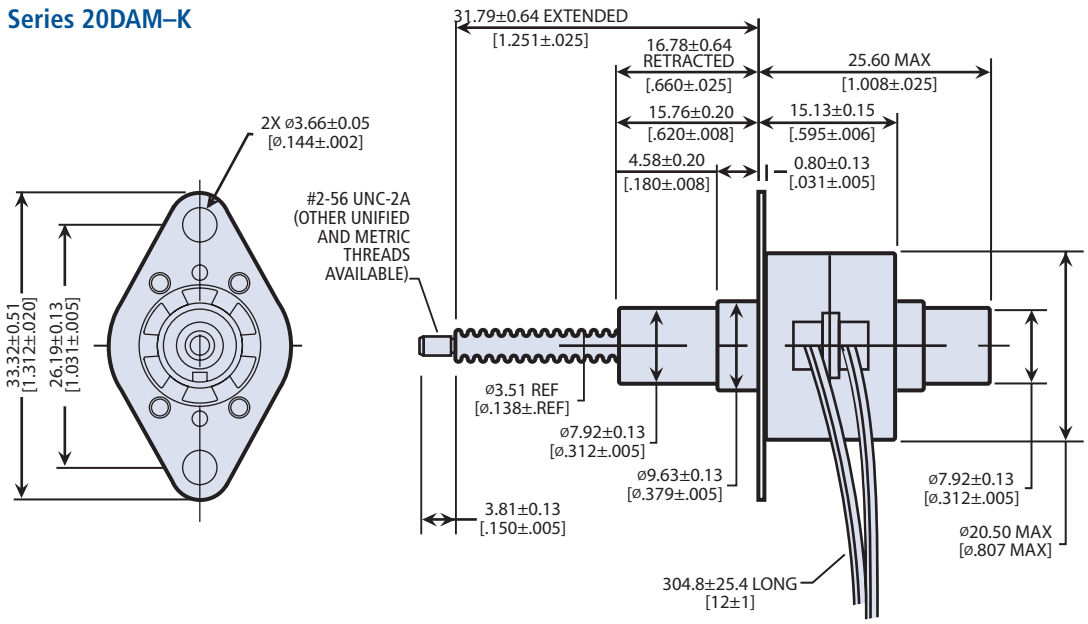

Series 20DAM–L

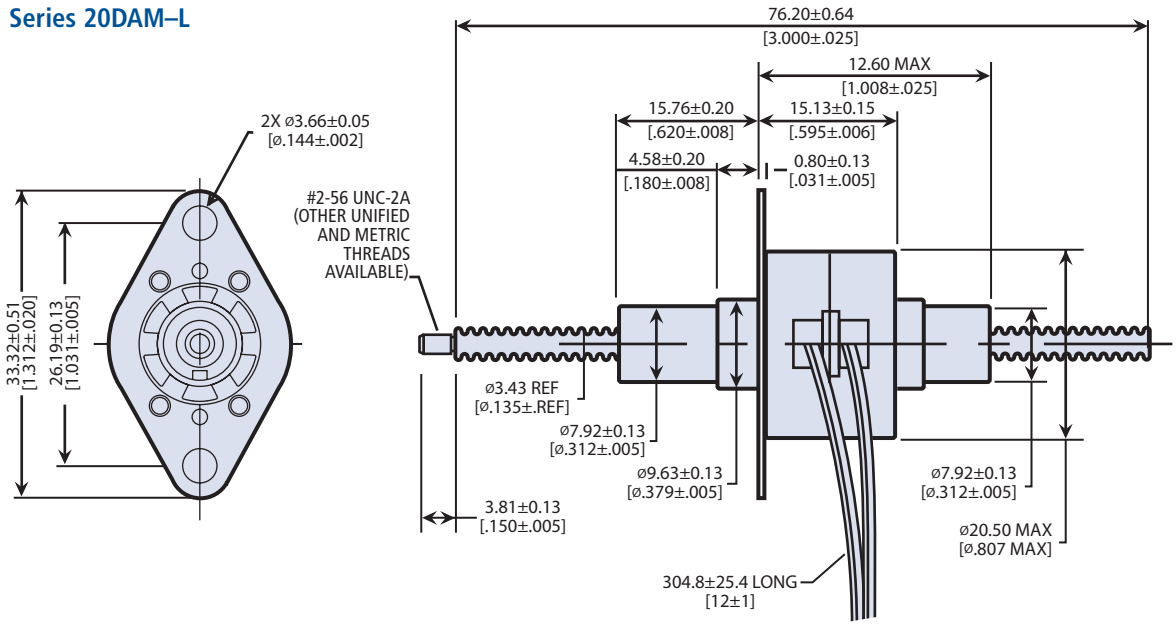

DANAHER MOTION is a trademark of Danaher Corporation. Danaher Motion makes every attempt to ensure accuracy and reliability of the specifications in this publication. Specifications are subject to change without notice. Danaher Motion provides this information "AS IS" and disclaims all warranties, express or implied, including, but not limited to, implied warranties of merchantability and fitness for a particular purpose.It is the responsibility of the product user to determine the suitability of this product for a specific application. ©2005 Danaher Motion.

Technical Specifications - Captive Version 20DAM–K

Part Number	Magnet Type	DC Operating Voltage	Linear Travel Per Step	Maximum Force*	Minimum Holding Force (Unenergized)	Maximum Travel
20DAM10D1U-K	Neodymium	5	.001" (0.0254mm)	75 oz (20.9 N)	200 oz (55.6 N)	0.59" (15.0mm)
20DAM10D2U-K		12				
20DAM20D1U-K		5	.002" (0.0508mm)	50 oz (13.9 N)	40 oz (11.1 N)	
20DAM20D2U-K		12				
20DAM40D1U-K		5	.004" (0.1016mm)	30 oz (8.3 N)	10 oz (2.8 N)	
20DAM40D2U-K		12				
20DAM10D1B-K		5	.001" (0.0254mm)	110 oz (30.6 N)	200 oz (55.6 N)	
20DAM10D2B-K		12				
20DAM20D1B-K		5	.002" (0.0508mm)	75 oz (20.9 N)	40 oz (11.1 N)	
20DAM20D2B-K		12				
20DAM40D1B-K		5	.004" (0.1016mm)	40 oz (11.1 N)	10 oz (2.8 N)	
20DAM40D2B-K		12				

*Measured with 2 phases energized

Coil Type	Unipolar		Bipolar	
Coil Data	1U (5VDC)	2U (12VDC)	1B (5VDC)	2B (12VDC)
Resistance Per Phase	20.0 Ω	115.2 Ω	20.0 Ω	115.2 Ω
Inductance Per Phase	3.8 mH ref	20.3 mH ref	7.2 mH ref	47.1 mH ref

Technical Specifications - Non-Captive Version 20DAM–L

Part Number	Magnet Type	DC Operating Voltage	Linear Travel Per Step	Maximum Force*	Minimum Holding Force (Unenergized)	Maximum Travel
20DAM10D1U-L	Neodymium	5	.001" (0.0254mm)	75 oz (20.9 N)	200 oz (55.6 N)	1.97" (50.0mm)
20DAM10D2U-L		12				
20DAM20D1U-L		5	.002" (0.0508mm)	50 oz (13.9 N)	40 oz (11.1 N)	
20DAM20D2U-L		12				
20DAM40D1U-L		5	.004" (0.1016mm)	30 oz (8.3 N)	10 oz (2.8 N)	
20DAM40D2U-L		12				
20DAM10D1B-L		5	.001" (0.0254mm)	110 oz (30.6 N)	200 oz (55.6 N)	
20DAM10D2B-L		12				
20DAM20D1B-L		5	.002" (0.0508mm)	75 oz (20.9 N)	40 oz (11.1 N)	
20DAM20D2B-L		12				
20DAM40D1B-L		5	.004" (0.1016mm)	40 oz (11.1 N)	10 oz (2.8 N)	
20DAM40D2B-L		12				

*Measured with 2 phases energized

Coil Type	Unipolar		Bipolar	
Coil Data	1U (5VDC)	2U (12VDC)	1B (5VDC)	2B (12VDC)
Resistance Per Phase	20.0 Ω	115.2 Ω	20.0 Ω	115.2 Ω
Inductance Per Phase	3.8 mH ref	20.3 mH ref	7.2 mH ref	47.1 mH ref

DANAHER MOTION is a trademark of Danaher Corporation. Danaher Motion makes every attempt to ensure accuracy and reliability of the specifications in this publication. Specifications are subject to change without notice. Danaher Motion provides this information "AS IS" and disclaims all warranties, express or implied, including, but not limited to, implied warranties of merchantability and fitness for a particular purpose.It is the responsibility of the product user to determine the suitability of this product for a specific application. ©2005 Danaher Motion.

20DAM Unipolar Schematics Diagram

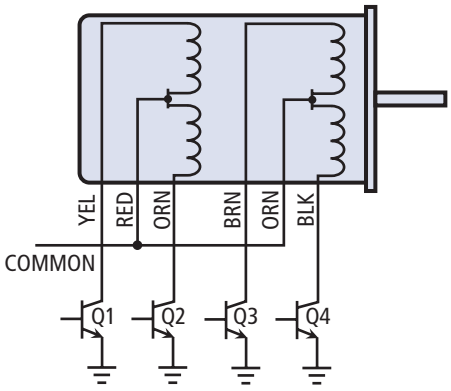

20DAM Unipolar Switching Sequence

STEP	Q1 YEL	Q2 ORN	Q3 BRN	Q4 BLK
1	**ON**	OFF	**ON**	OFF
2	**ON**	OFF	OFF	**ON**
3	OFF	**ON**	OFF	**ON**
4	OFF	**ON**	**ON**	OFF
1	**ON**	OFF	**ON**	OFF

EXTEND ↓ RETRACT ↑

Minimum Pull-In Linear Force vs Linear Rate at 20°C
20DAM Unipolar (Neodymium), L/R drive

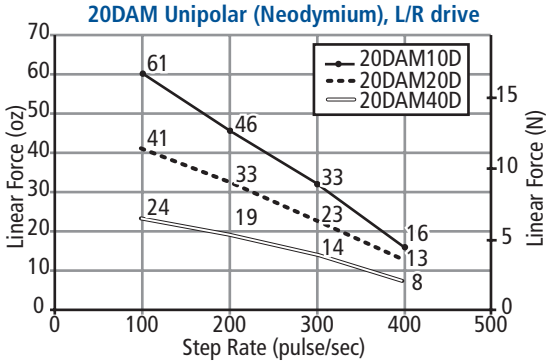

20DAM Bipolar Schematics Diagram

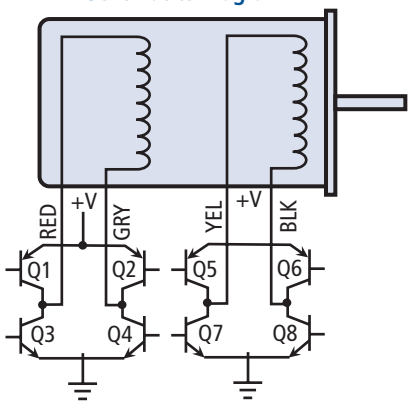

20DAM Bipolar Switching Sequence

STEP	Q1-Q4 RED	Q2-Q3 GRY	Q5-Q8 YEL	Q6-Q7 BLK
1	**ON**	OFF	**ON**	OFF
2	**ON**	OFF	OFF	**ON**
3	OFF	**ON**	OFF	**ON**
4	OFF	**ON**	**ON**	OFF
1	**ON**	OFF	**ON**	OFF

EXTEND ↓ RETRACT ↑

Minimum Pull-In Linear Force vs Linear Rate at 20°C
20DAM Bipolar (Neodymium), L/R drive

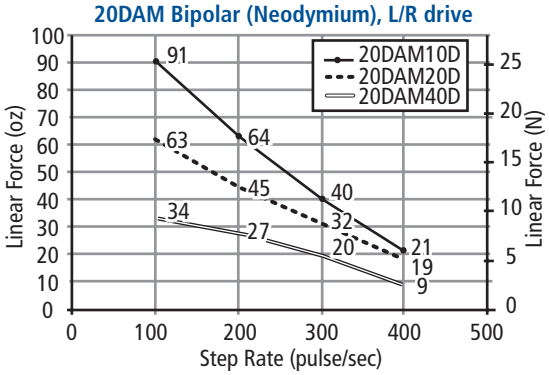

DANAHER MOTION is a trademark of Danaher Corporation. Danaher Motion makes every attempt to ensure accuracy and reliability of the specifications in this publication. Specifications are subject to change without notice. Danaher Motion provides this information "AS IS" and disclaims all warranties, express or implied, including, but not limited to, implied warranties of merchantability and fitness for a particular purpose.It is the responsibility of the product user to determine the suitability of this product for a specific application. ©2005 Danaher Motion.

20mm Digital Linear Actuators
Performance Comparative Chart - PSM vs HSI Inc.

The newly developed 20mm digital linear actuators offer a comprehensive range of linear travel of 0.001", or 0.002" or 0.004" per step for selection.

The performance of these products surpassed most of the products of similar frame size in the market.

Below are the comparative test data measured against HSI Inc.

Typical Pull-In Linear Force
20 MM DLA, L/R drive, .001" step, 5V, bipolar

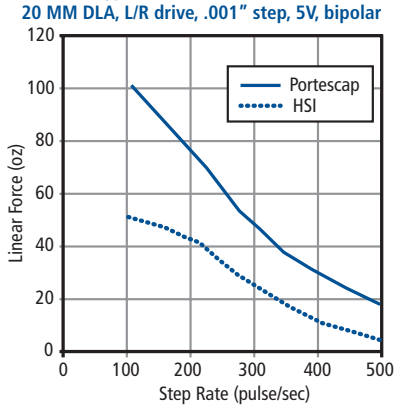

Linear Speed	PSM	HSI	Margin
pps	Linear Force (oz)		
100	**103**	51	**102%**
200	**76**	43	**77%**
300	**48**	25	**92%**
400	**29**	12	**142%**
500	**17**	4	**325%**
		Avg margin	**148%**

Linear travel of 0.001"per step

Typical Pull-In Linear Force
20 MM DLA, L/R drive, .002" step, 5V, bipolar

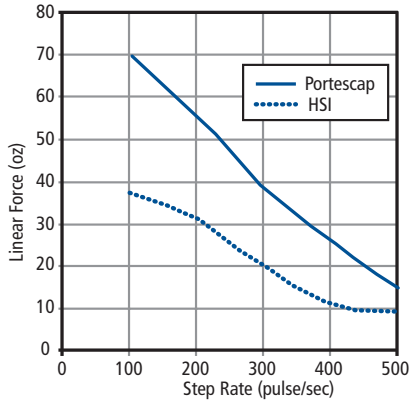

Linear Speed	PSM	HSI	Margin
pps	Linear Force (oz)		
100	**71**	37	**92%**
200	**55**	31	**77%**
300	**38**	20	**90%**
400	**26**	11	**136%**
500	**14**	9	**56%**
		Avg margin	**90%**

Linear travel of 0.002"per step

Typical Pull-In Linear Force
20 MM DLA, L/R drive, .004" step, 5V, bipolar

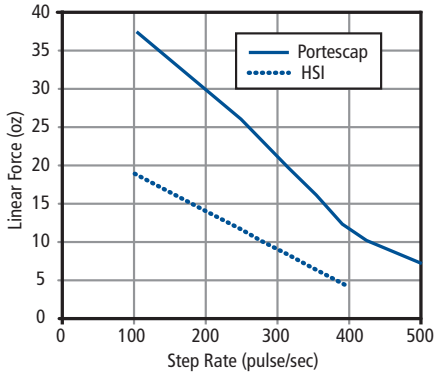

Linear Speed	PSM	HSI	Margin
pps	Linear Force (oz)		
100	**38**	19	**100%**
200	**30**	14	**114%**
300	**22**	9	**144%**
400	**12**	4	**200%**
500	**7**		
		Avg margin	**140%**

Linear travel of 0.004"per step

Motors tested under identical (or similar) conditions in Danaher Motion testing lab facility.

DANAHER MOTION is a registered trademark of Danaher Corporation. Danaher Motion makes every attempt to ensure accuracy and reliability of the specifications in this publication. Specifications are subject to change without notice. Danaher Motion provides this information "AS IS" and disclaims all warranties, express or implied, including, but not limited to, implied warranties of merchantability and fitness for a particular purpose.It is the responsibility of the product user to determine the suitability of this product for a specific application. ©2005 Danaher Motion.

New Name, Established Brands

Danaher Motion's wide range of motion control systems and components offer customers an unprecedented choice in selecting the right solution to match their particular application requirements. Our product innovations have been improving the efficiency and productivity of complex manufacturing operations for over 60 years through trusted brand names such as Dover, Kollmorgen, Pacific Scientific, Portescap and Thomson in industries as diverse as semiconductor, aerospace and defense, mobile-off-highway, packaging, medical and robotics.

In addition, Danaher Motion, through Motion Engineering (MEI), offers powerful integrated motion control solutions with its industry-leading, multi-axis motion platforms and SynqNet® communications network for ultra-reliable machine performance. From software and controller, through the communications network to drives and I/O devices, to mechanical and electro-mechanical products, Danaher Motion differentiates itself in the marketplace by designing standard and custom solutions to satisfy the most demanding application requirements.

Our growing family of leading motion control products and application expertise tells only half the story. With a worldwide service and support infrastructure, our field service engineers and support teams are available to assist whenever they are needed. It is part of Danaher Corporation's unrelenting focus on its customer. That's why more and more design engineers are turning to Danaher Motion to meet their motion control requirements.

Danaher Motion Values:

- Application Expertise
- Broad & Innovative Motion Control Products and Systems
- Customer Focus
- Customizable Products and Services
- Motion Control Pioneers with Global Staying Power
- Operational Excellence

Portescap™

Solutions by DANAHER MOTION

DANAHER MOTION is a trademark.

Danaher Motion makes every attempt to ensure accuracy and reliability of the specifications in this publication. Specifications are subject to change without notice. Danaher Motion provides this information "AS IS" and disclaims all warranties, express or implied, including, but not limited to, implied warranties of merchantability and fitness for a particular purpose. It is the responsibility of the product user to determine the suitability of this product for a specific application.

©2005 Danaher Motion. BH 04/18/05 200501-07 0105

FOR IMMEDIATE ASSISTANCE:

Internet: www.DanaherMotion.com

In USA, Canada or Mexico:
Danaher Motion
203A West Rock Road
Radford, VA 24141 USA
Phone: 1-540-633-3400
Fax: 1-540-639-4162
E-mail: DMAC@DanaherMotion.com
Literature: LitRequest@DanaherMotion.com

In Europe:

Germany:
Danaher Motion GmbH
Wacholderstr. 40-42
D-40489 Düsseldorf
Germany
Phone: +49 (0) 203 9979-0
Fax: +49 (0) 203 9979-155
Email: info@DanaherMotion.net

Italy:
Danaher Motion srl
Via Brughetti ZI
20030 Bovisio Masciago (MI)
Italy
Phone: +39 0362 59 42 60
Fax: +39 0362 59 42 63
Email: info@DanaherMotion.it

Sweden:
Danaher Motion
Box 9053
SE-29109 Kristianstad
Sweden
Phone: +46 (0)44 24 67 00
Fax: +46 (0)44 24 40 85
Email: helpdesk@tollo.com

UK:
Danaher Motion
Chartmoor Road, Chartwell Business Park
Leighton Buzzard, Bedfordshire
LU7 4WG. United Kingdom
Phone: +44 (0)1525 243 243
Fax: +44 (0)1525 243 244
Email: LMSEurope@DanaherMotion.com

France:
Danaher Motion
C.P. 80018
12, Rue Antoine Becquerel - Z.I. Sud
F-72026 Le Mans Cedex 2
France
Phone: +33 (0) 243 50 03 30
Fax: +33 (0) 243 50 03 39
Email: sales.france@tollo.com

ASIA:

China:
Danaher Motion
Rm 2205, Scitech Tower
22 Jianguomen Wai Street
Beijing, China, 100004
Phone: +86 10 6515 0260
Fax: +86 10 6515 0263
Email: Chinainfo@DanaherMotion.com

Japan:
Danaher Motion Japan
3F, 2nd Nagaoka Bldg
2-8-5, Hacchobori, Chuo-ku
Tokyo 104-0032 Japan
Phone: +81-3-6222-1051
Fax: +81-3-6222-1055
Email: sales@DanaherMotion.com