HAMMOND MANUFACTURING

Quality Products. Service Excellence.

Type 12 Wiring Trough *1486 Series*



Application

- Designed to enclose and protect multiple wiring junctions from dirt, dust, oil and water.

Standards

- UL 870 Type 1
- CSA Type 1
- Complies with
  - NEMA Type 12
  - JIC EGP-1-1967
  - JIC EMP-1-1967
  - IEC 60529, IP54

Construction

- Formed 14 gauge steel.
- Smooth continuously welded seams.
- Butt hinged cover is secured with easily operated screw clamps.
- Oil resistant gaskets are permanently secured.
- 12 gauge external mounting feet are welded to the back.

Finish

- Troughs and covers are finished in ANSI 61 gray powder coating.

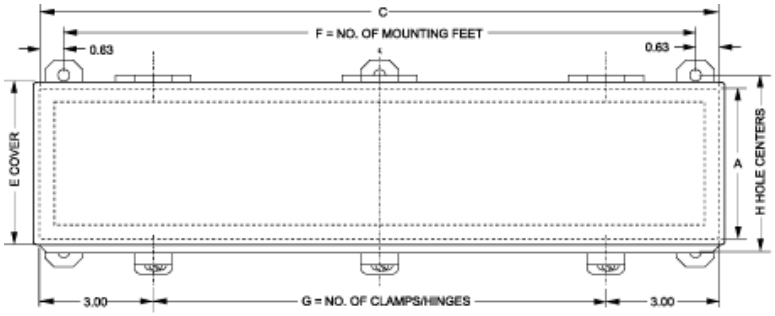

Top View

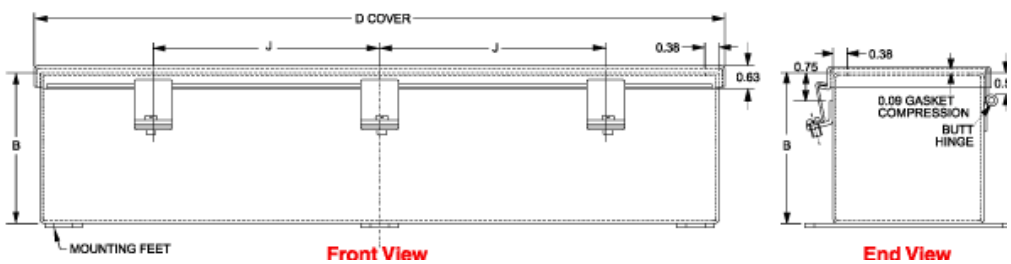

Front View

End View

Part No.	Overall Dimensions A	B	C	Cover Size D	E	F	G	H	J	Ship Wt. (lbs)

	Overall Dimensions			Cover Size						Ship Wt.
Part No.	A	B	C	D	E	F	G	H	J	(lbs)
1486B12	2.50	2.50	12.00	12.31	2.84	2.00	2.00	3.19	6.00	3
1486B18	2.50	2.50	18.00	18.31	2.84	2.00	2.00	3.19	12.00	5
1486B24	2.50	2.50	24.00	24.31	2.84	2.00	3.00	3.19	9.00	6
1486B30	2.50	2.50	30.00	30.31	2.84	3.00	3.00	3.19	12.00	9
1486B36	2.50	2.50	36.00	36.31	2.84	3.00	3.00	3.19	15.00	10
1486B48	2.50	2.50	48.00	48.31	2.84	3.00	3.00	3.19	21.00	13
1486B60	2.50	2.50	60.00	60.31	2.84	3.00	4.00	3.19	18.00	16
1486B72	2.50	2.50	72.00	72.31	2.84	3.00	4.00	3.19	22.00	19
1486C12	4.00	4.00	12.00	12.31	4.34	2.00	2.00	4.69	6.00	6
1486C18	4.00	4.00	18.00	18.31	4.34	2.00	2.00	4.69	12.00	8
1486C24	4.00	4.00	24.00	24.31	4.34	2.00	3.00	4.69	9.00	10
1486C30	4.00	4.00	30.00	30.31	4.34	3.00	3.00	4.69	12.00	13
1486C36	4.00	4.00	36.00	36.31	4.34	3.00	3.00	4.69	15.00	16
1486C48	4.00	4.00	48.00	48.31	4.34	3.00	3.00	4.69	21.00	20
1486C60	4.00	4.00	60.00	60.31	4.34	3.00	4.00	4.69	18.00	25
1486C72	4.00	4.00	72.00	72.31	4.34	3.00	4.00	4.69	22.00	30
1486D12	6.00	6.00	12.00	12.31	6.34	2.00	2.00	6.69	6.00	9
1486D18	6.00	6.00	18.00	18.31	6.34	2.00	2.00	6.69	12.00	16
1486D24	6.00	6.00	24.00	24.31	6.34	2.00	3.00	6.69	9.00	16
1486D30	6.00	6.00	30.00	30.31	6.34	3.00	3.00	6.69	12.00	19
1486D36	6.00	6.00	36.00	36.31	6.34	3.00	3.00	6.69	15.00	23
1486D48	6.00	6.00	48.00	48.31	6.34	3.00	3.00	6.69	21.00	29
1486D60	6.00	6.00	60.00	60.31	6.34	3.00	4.00	6.69	18.00	32
1486D72	6.00	6.00	72.00	72.31	6.34	3.00	4.00	6.69	22.00	43

Data subject to change without notice

© 2015. Hammond Manufacturing Ltd. All rights reserved.