# E40482

## Process adapter clamp ISO 2852

ADAPT ISO2852 DN40

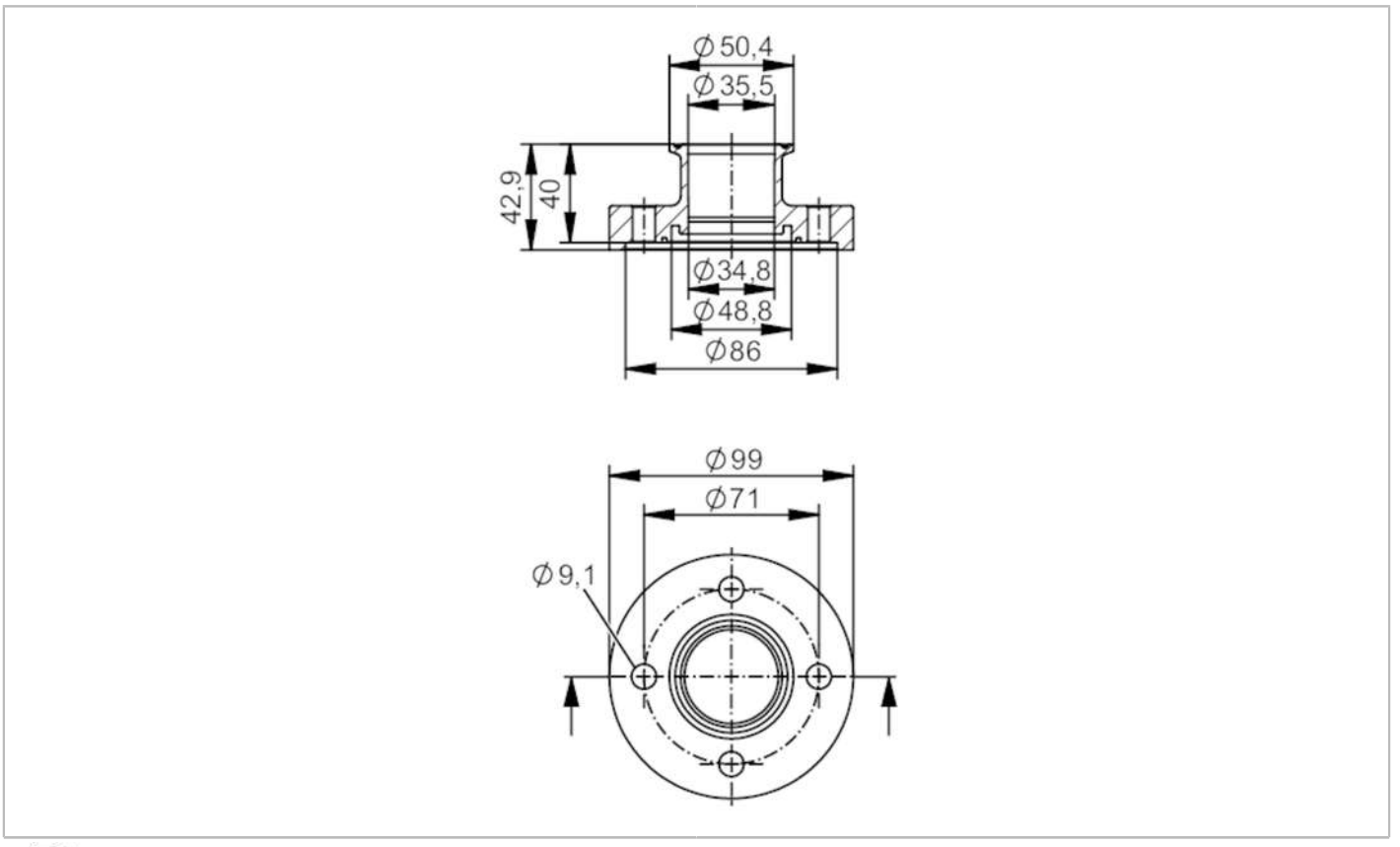


EC 1935/2004 FCM

| | | | |
|---|---|---|---|
| **Application** | | | |
| Design | | for volumetric flow meters SMF | |
| Application | | food and beverage industry; hygienic systems | |
| Pressure rating | | 25 bar | 2.5 MPa |
| **Tests / approvals** | | | |
| Pressure Equipment Directive | | A possible classification to PED depends on the application and has to be carried out by the user / operator. | |
| Safety instructions | | The compatibility between medium and product material has to be checked in all applications. | |
| **Mechanical data** | | | |
| Weight | [g] | 2395 | |
| Materials | | stainless steel (316L/1.4404) | |
| Nominal diameter | | DN40 (1 1/2“) | |
| Sensor connection | | ifm-specific device flange | |
| Process connection | | Clamp ISO 2852 | |
| Process connection suitable for pipe standard | | (ISO 2037); (DIN EN 10357 Series D); (JIS G3447) | |
| Surface characteristics Ra/Rz of the wetted parts | | Ra ≤ 0.4 µm | |
| **Accessories** | | | |
| Items supplied | | screws 8 | |

# E40482

## Process adapter clamp ISO 2852

**ADAPT ISO2852 DN40**

| Remarks | |
|---|---|
| Pack quantity | 2 pcs. |