Brand of NTN corporation

Technical data

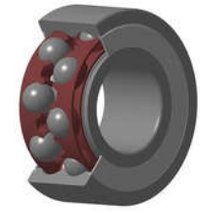

5201ZZG15

Double row angular contact ball bearings

VISUAL (S)

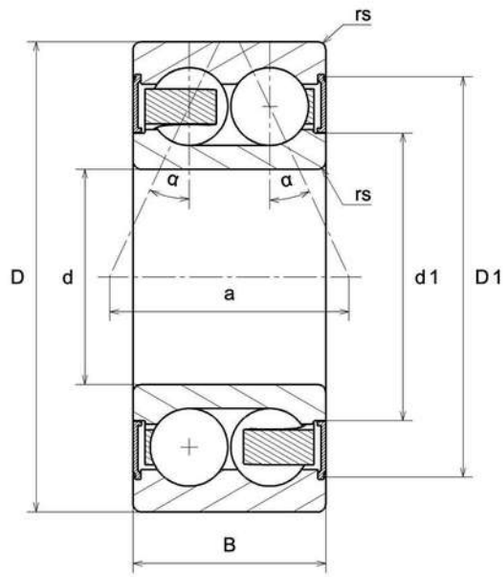

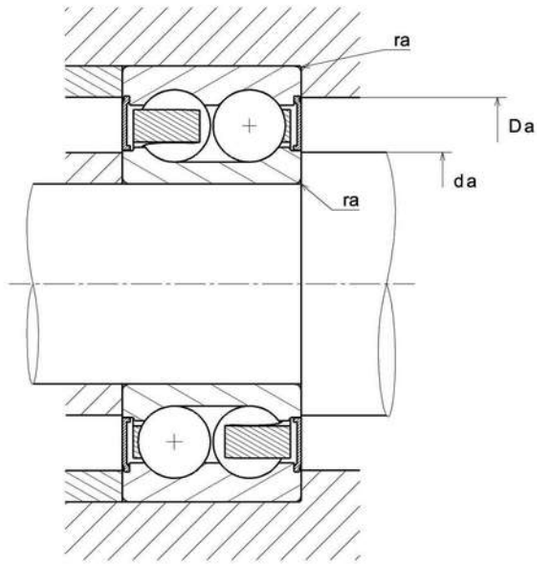

5201ZZG15
Double row angular contact ball bearings

PRODUCT DEFINITION	
Brand	SNR
d - Internal diameter	12 mm
D - External diameter	32 mm
B - Bearing/Inner ring width	15,9 mm
d1 - External diameter inner ring	18,3 mm
D1 - Inner diameter outer ring	28 mm
a - Charge load application point	16,6 mm
- Contact angle	25 °
rs - Min fillet radius	0,6 mm
Radial clearance class	CN
Precision class	P0
Mass	0,051 kg

PRODUCT PERFORMANCE	
C - Dynamic load	10400000 mN
C0 - Static load	5900000 mN
Cu - Fatigue limit load	380000 mN
f0 - Coefficient	12.8
N ref - Reference thermal speed	96000 °/s
N lim - Mechanical Limit Speed	108000 °/s
Tmin - Min operating temperature	253,15 °K
Tmax - Max operating temperature	393,15 °K

BEARING FREQUENCIES	
BPFO - Over rolling frequency on outer ring (60 rpm)	2.635 Hz

BEARING FREQUENCIES	
BPFI - Over rolling frequency on inner (60 rpm)	4.365 Hz
BSF - Over rolling frequency on rolling element (60 rpm)	3.443 Hz
BRF - Rotational frequency – rolling element (60 rpm)	1.722 Hz
FTF - Rotational frequency - cage (60 rpm)	0.376 Hz

ABUTMENT	
da min - Min shoulder diameter IR	16 mm
da max - Max shoulder diameter IR	18,3 mm
Da max - Max shoulder diameter OR	28 mm
ra max - Max shaft & housing fillet radius	0,6 mm