DATASHEET - Q18S1R



Key-operated actuator, 2 positions, maintained

Part no.	**Q18S1R**
Catalog No.	**038805**
Alternate Catalog No.	**Q18S1R**

Delivery program

Product range			RMQ16
Basic function			Key-operated buttons
Mounting hole diameter	∅	mm	16
Single unit/Complete unit			Single unit
Design			Key operated
			maintained
Function:			
			45°
			2 positions
Key withdrawable in position			
			0
Degree of Protection			IP65
Front ring			without bezel
Connection to SmartWire-DT			no
Information about equipment supplied			With 1 key
Ordering information			For each color there is a corresponding key, → accessories,

Notes

Additional individual lock mechanisms (each colour corresponds with a separate lock mechanism)

Technical data

General

Standards			IEC/EN 60947
Lifespan, mechanical	Operations	x 10^6	> 3
Operating frequency	Operations/h		≦ 1800
Operating torque		Nm	≦ 0.4
Degree of protection, IEC/EN 60529			IP65
Climatic proofing			Damp heat, constant, to IEC 60068-2-78 Damp heat, cyclic, to IEC 60068-2-30
Ambient temperature			
Open		°C	-25 - +60
Enclosed		°C	- 25 - 40
Mounting position			As required
Mechanical shock resistance		g	> 40 according to IEC 60068-2-27 Shock duration 11 ms Sinusoidal
Terminal capacities		mm^2	0.5 - 1.0
Blade terminal			2.8 x 0.8 mm to DIN 46244
Fast-on connectors			2.8 x 0.8 mm to DIN 46247 and IEC 60760

Contacts

Rated impulse withstand voltage	U_{imp}	V AC	800
Rated insulation voltage	U_i	V	250
Overvoltage category/pollution degree			III/3
Rated operational voltage	U_e	V AC	24
Control circuit reliability			
at 24 V DC/5 mA	H_F	Fault probability	< 10^{-7}, < 1 failure in 10^7 operations

at 5 V DC/1 mA	H_F	Fault probability	< 5 x 10^{-6}, < 1 failure in 5 x 10^6 operations
Use of insulated ferrule ISH 2,8			On >24 V AC/DC recommended On >50 V AC or 120 V DC mandatory, also on unoccupied blade terminals

Design verification as per IEC/EN 61439

Technical data for design verification			
Rated operational current for specified heat dissipation	I_n	A	0
Heat dissipation per pole, current-dependent	P_{vid}	W	0
Equipment heat dissipation, current-dependent	P_{vid}	W	0
Static heat dissipation, non-current-dependent	P_{vs}	W	0
Heat dissipation capacity	P_{diss}	W	0
Operating ambient temperature min.		°C	-25
Operating ambient temperature max.		°C	60
IEC/EN 61439 design verification			
10.2 Strength of materials and parts			
10.2.2 Corrosion resistance			Meets the product standard's requirements.
10.2.3.1 Verification of thermal stability of enclosures			Meets the product standard's requirements.
10.2.3.2 Verification of resistance of insulating materials to normal heat			Meets the product standard's requirements.
10.2.3.3 Verification of resistance of insulating materials to abnormal heat and fire due to internal electric effects			Meets the product standard's requirements.
10.2.4 Resistance to ultra-violet (UV) radiation			Please enquire
10.2.5 Lifting			Does not apply, since the entire switchgear needs to be evaluated.
10.2.6 Mechanical impact			Does not apply, since the entire switchgear needs to be evaluated.
10.2.7 Inscriptions			Meets the product standard's requirements.
10.3 Degree of protection of ASSEMBLIES			Does not apply, since the entire switchgear needs to be evaluated.
10.4 Clearances and creepage distances			Meets the product standard's requirements.
10.5 Protection against electric shock			Does not apply, since the entire switchgear needs to be evaluated.
10.6 Incorporation of switching devices and components			Does not apply, since the entire switchgear needs to be evaluated.
10.7 Internal electrical circuits and connections			Is the panel builder's responsibility.
10.8 Connections for external conductors			Is the panel builder's responsibility.
10.9 Insulation properties			
10.9.2 Power-frequency electric strength			Is the panel builder's responsibility.
10.9.3 Impulse withstand voltage			Is the panel builder's responsibility.
10.9.4 Testing of enclosures made of insulating material			Is the panel builder's responsibility.
10.10 Temperature rise			Not applicable.
10.11 Short-circuit rating			Is the panel builder's responsibility. The specifications for the switchgear must be observed.
10.12 Electromagnetic compatibility			Is the panel builder's responsibility. The specifications for the switchgear must be observed.
10.13 Mechanical function			The device meets the requirements, provided the information in the instruction leaflet (IL) is observed.

Technical data ETIM 7.0

Low-voltage industrial components (EG000017) / Front element for selector switch (EC000222)			
Electric engineering, automation, process control engineering / Low-voltage switch technology / Command and alarm device / Front element for selector switches (ecl@ss10.0.1-27-37-12-13 [AKF031014])			
Number of switch positions			2
Type of control element			Key
Suitable for illumination			No
Colour control element			Black
Colour indicator light cap			Other
Construction type lens			Square
Hole diameter		mm	16
Width opening		mm	0
Height opening		mm	0
Switching function latching			Yes
Spring-return			No

With front ring	Yes
Material front ring	Plastic
Colour front ring	Black
Degree of protection (IP), front side	IP65
Degree of protection (NEMA)	1

Approvals

Product Standards	IEC/EN 60947-5; UL 508; CSA-C22.2 No. 14-05; CE marking
UL File No.	E29184
UL Category Control No.	NKCR
CSA File No.	46552
CSA Class No.	3211-03
North America Certification	UL listed, CSA certified
Degree of Protection	UL/CSA Type 1

Dimensions

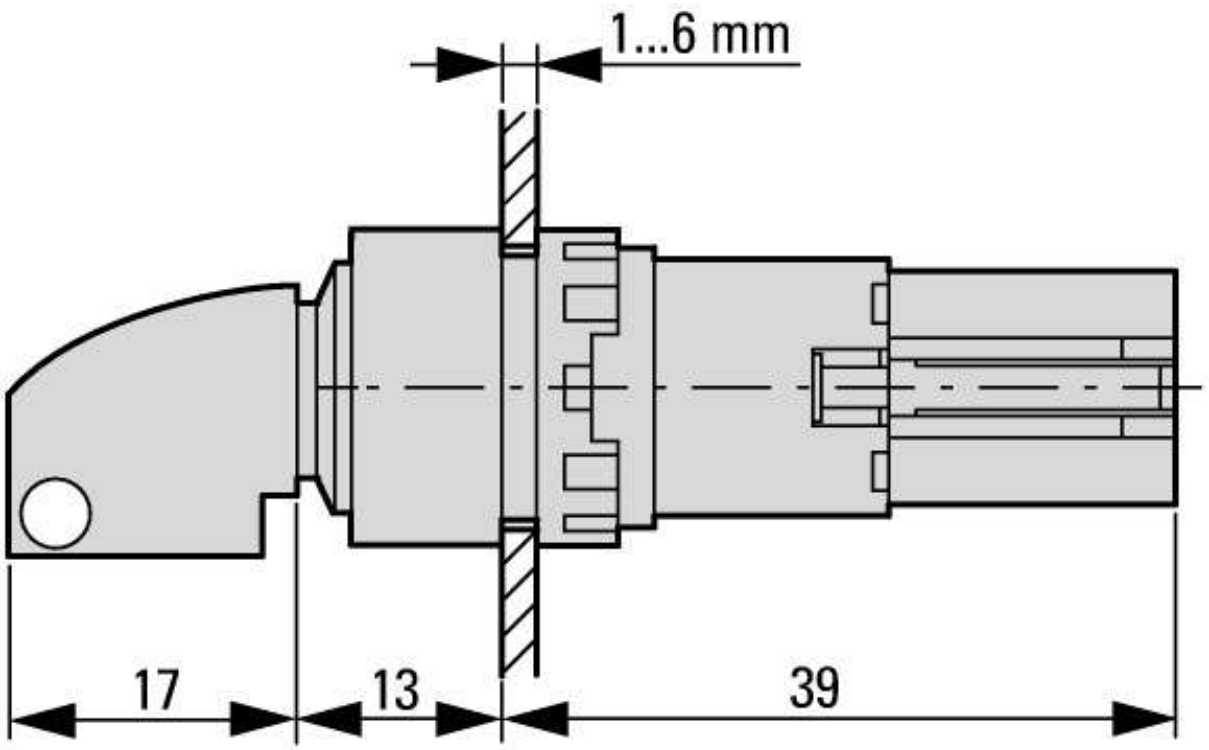

Actuating and indicator elements
Square style

Additional product information (links)

IL04716016Z (AWA1160-1429) Mounting of components

IL04716016Z (AWA1160-1429) Mounting of components	https://es-assets.eaton.com/DOCUMENTATION/AWA_INSTRUCTIONS/IL04716016Z2018_05.pdf

© 02/2021 by Eaton Industries GmbH