CMS – Current Measurement System

User manual

Document ID: 2CCC481002M0201
Date: 03.04.2014



Safety Precautions

Warning

Failure to follow these instructions could result in death, personal injury or property damage. The device should be installed by a qualified person only. If the components or devices do not appear to be in a proper condition, they must be replaced.

Disposal



Faulty products should be treated as hazardous waste and disposed of in an appropriate manner. National or regional regulations regarding the disposal of hazardous waste should be adhered to.

Meaning of symbols

	Warning May cause death or serious injury		Information that is useful or important but not relevant to safety
	European conformity mark		Torque
	Mind the instructions in the user manual		Disposal

Disclaimer

The information in this document is subject to change without notice and should not be construed as a commitment by ABB Ltd.. ABB Ltd. assumes no responsibility for any errors that may appear in this document.

In no event shall ABB Ltd. be liable for direct, indirect, special, incidental or consequential damages of any nature or kind arising from the use of this document, nor shall ABB Ltd. be liable for incidental or consequential damages arising from use of any software or hardware described in this document.

Copyright

This document and parts thereof must not be reproduced or copied without written permission from ABB Ltd., and the contents thereof must not be imparted to a third party nor used for any unauthorized purpose.

The software or hardware described in this document is furnished under a license and may be used, copied, or disclosed only in accordance with the terms of such license.

© Copyrigth 2012 ABB Ltd. All rights reserved.

Trademark

ABB Ltd. is a registered trademark of the ABB Group. All other brand or product names mentioned in this document may be trademarks or registered trademarks of their respective holders.

Table of content

Intended use 4

System overview 4

Scope of delivery 5

Mounting and cabling 7

- Mounting the Control Unit 7
- Mounting the pro M compact and SMISSLINE sensor 7
- Mounting the S800 Sensor 7
- Mounting the DIN-rail sensor 8
- Mounting the cable sensor 8
- Cabling the Control Unit 8
- Cabling the sensors 9

Control Unit 9

- Menu overview 9
- Add and remove sensors 10
- Change DC polarity of sensors 10
- MODBUS configuration 11
- Display configuration 11
- Measurement functions 12

MODBUS-Kommunikation 13

- MODBUS communication protocol 13
- Communication to CMS 14
- Examples 20

Technical data 21

FAQ 23

Technical drawings 24

Intended use

The CMS is a system for current measurement of electrical lines.

The system consists of a Control Unit and sensors with different measurement ranges. The sensors measure alternating, direct and mixed currents (TRMS). The sensors get connected to the Control Unit by a flatcable, the CMS-Bus. The measurement data can be remotely queried by a RS485 interface (Modbus RTU).

24V DC is needed for supply.

System overview

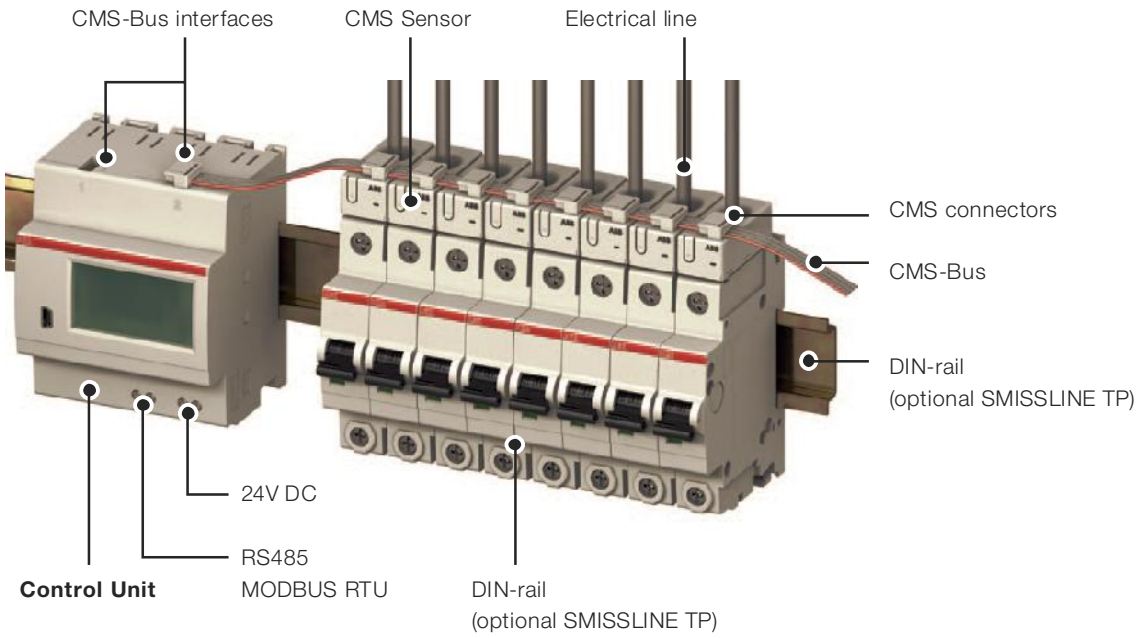

Scope of delivery

Control Unit CMS-600

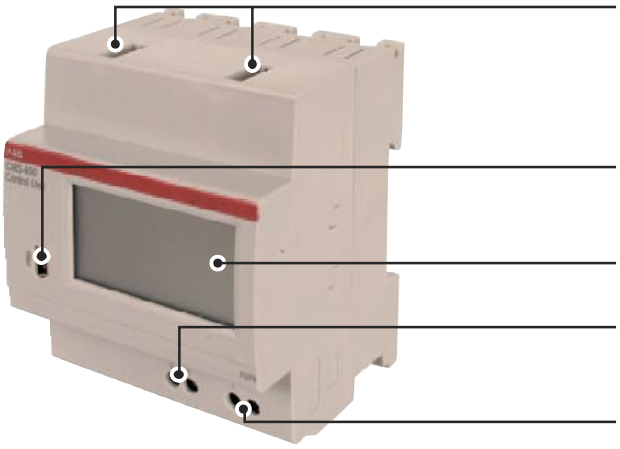

Sensors

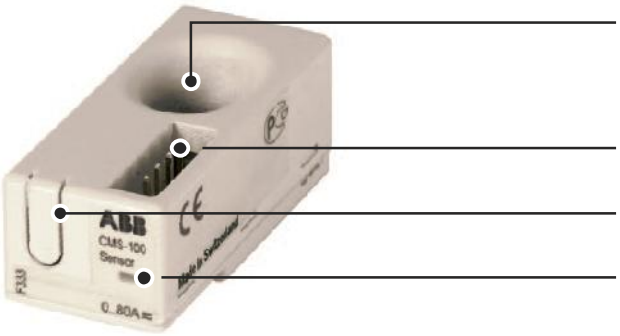

i

LED Status

• On	Normal operation
• Slow blinking	Sensor is not added to the system
• Fast blinking	Sensor is selected, ID is shown on touch display

Mounting	pro M compact & SMISSLINE	S800	DIN-Rail	Cable tie
Sensor type	for all ABB MCBs, RCDs, RCBOs with twin terminals 	for all ABB S800 devices with cage terminals 	universal use 	universal use 
Sensors 18 mm CMS-100xx (80 A) CMS-101xx (40 A) CMS-102xx (20 A)	CMS-100PS CMS-101PS CMS-102PS 	CMS-100S8 CMS-101S8 CMS-102S8 	CMS-100DR CMS-101DR CMS-102DR 	CMS-100CA CMS-101CA CMS-102CA 
Sensors 25 mm CMS-200xx (160 A) CMS-201xx (80 A) CMS-202xx (40 A)		CMS-200S8 CMS-201S8 CMS-202S8 	CMS-200DR CMS-201DR CMS-202DR 	CMS-200CA CMS-201CA CMS-202CA 

Flat cable CMS-800 (2m) 

Flat cable CMS-801 (3m) 

Connector set CMS-820 

35 x Connector housing

35 x Connector

Mounting and cabling

Mounting the Control Unit

i

- Remove rapid fixation (RAFIX) before mounting on SMISSLINE TP

1a



DIN-rail mounting

or

1b

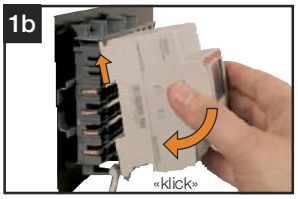

SMISSLINE TP mounting

Mounting the M compact and SMISSLINE sensor

i

- Sensors fit to all the ABB installation devices with twin terminals
- The cable should not exert force to the sensor, otherwise measuring errors are possible

1



Unscrew the terminal of the installation device

2

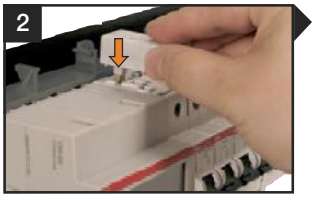

Insert the metal pin of the sensor into the rear terminal connection

3

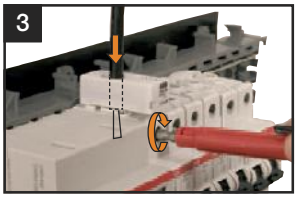

Put cable through opening of sensor into installation device. The cable has to be isolated within the range of the sensor, then thighten the screw.

Mounting the S800 Sensor

i

- The sensors can be mounted to all S800 devices with cage terminals
- The cable should not exert force to the sensor, otherwise measuring errors are possible

1



Remove interchangeable adapter

2



Slip sensor on S800

3

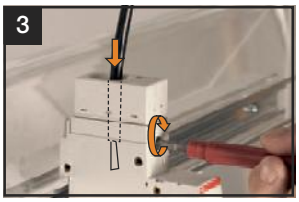

Put cable through opening of sensor into installation device. The cable has to be isolated within the range of the sensor, then thighten the screw.

Mounting the DIN-rail sensor

i

- The sensors can be mounted to 35mm DIN rail acc. EN 60715
- The cable should not exert force to the sensor, otherwise measuring errors are possible

1



"Click" device on DIN rail

2



Put cable through opening of sensor into installation device. Fix the cable with a cable tie if needed.

Mounting the cable sensor

i

- The cable should not exert force to the sensor, otherwise measuring errors are possible

1

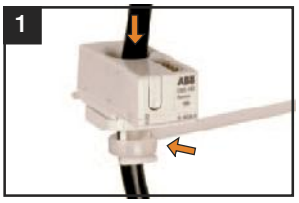

Put cable thorugh opening of sensor into installation device. Fix the cable with a cable tie.

Cabling the Control Unit

i

Connecting terminals for 24 V DC and RS485:

- max. cable cross-section 2,5 mm^2
- stripping length 13mm
- current consumption of Control Unit max. 1.5 A

1

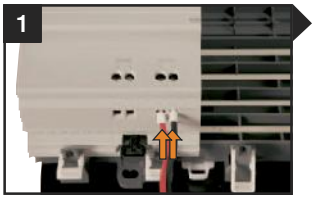

Insert cables into the connecting terminals

2

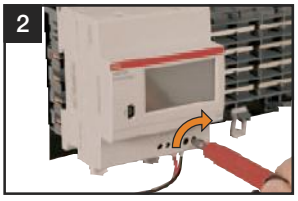

Tighten the screws

Cabling the sensors

i

- Use the connectors only once
- Connect a max. number of 32 sensors to each Control Unit CMS-Bus interface
- Do not exceed a maximum line length of 2 m
- Flatcable should not exert force to the sensor, otherwise measuring errors are possible
- Keep a distance of min. 5.5 mm from the flat cable to unisolated live parts

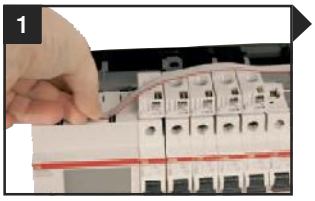

Put the flat cable onto the CMS-Bus interfaces



Mark the desired placement of the connectors with a pen

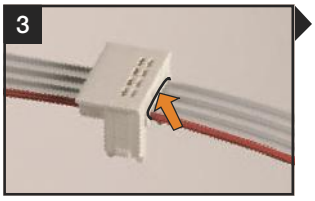

Press the flat cable into the cable duct of the connector housing

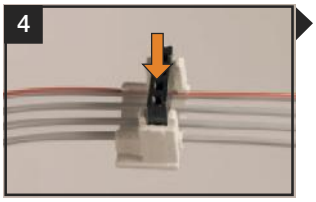

Put the connector at the position of the marking into the connector housing

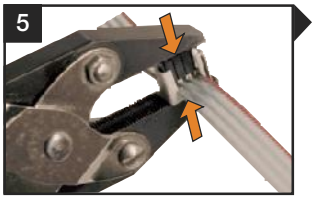

Press together the connector and the connector housing with a parallel pliers tool. Repeat that process at the other markings.

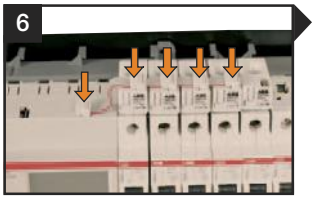

Plug the connectors to the Control Unit and the sensors

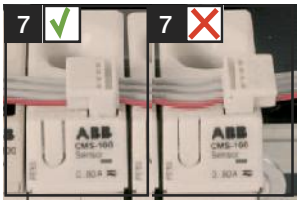

Plug the connectors to the sensors with the longer side to the middle

Control Unit

Menu overview

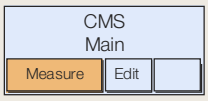	Measurement functions of Control Unit
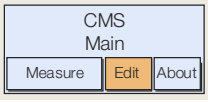	Addition and removal of sensors, change of DC polarity, Modus configuration, Display configuration
	Information about serial number, hard- and software version of Control Unit

Add and remove sensors

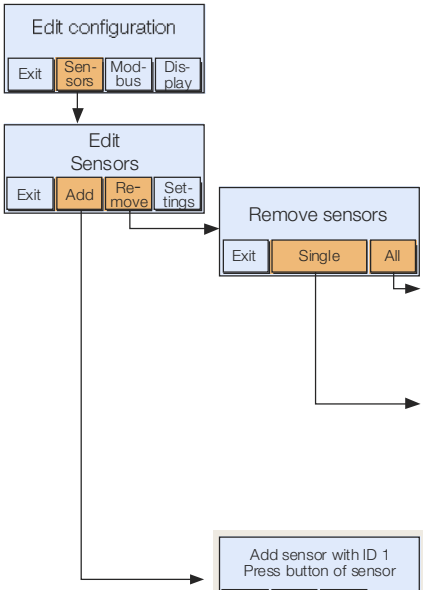

“Yes” to remove all sensors

Remove single sensors
Push ⬇ or ⬆ until the desired sensor ID appears.
Alternatively press push button of desired sensor.
Press “Remove” to remove the selected sensor.

Push ⬇ or ⬆ until the desired sensor ID appears. Press push button of desired sensor to add sensor to the system.
If sensor has an ID already, ID will be replaced

Change DC polarity of sensors

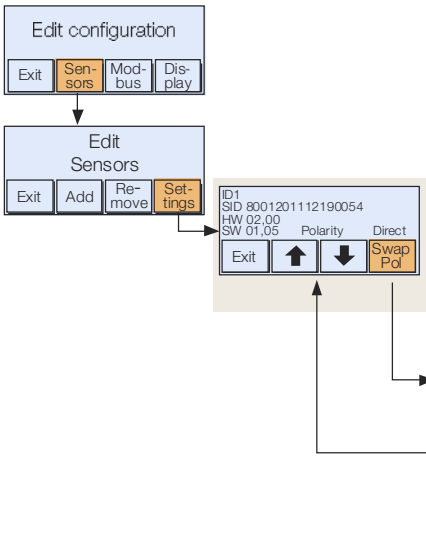



Direct



Reverse

Push ⬇ or ⬆ until the desired sensor ID appears. Alternatively press push button of desired sensor.
Information about serial number, hard- and software version of sensors.

Change DC polarity of sensors
Press “Single” to change the previously selected sensor.

Change DC polarity of all sensors

MODBUS configuration

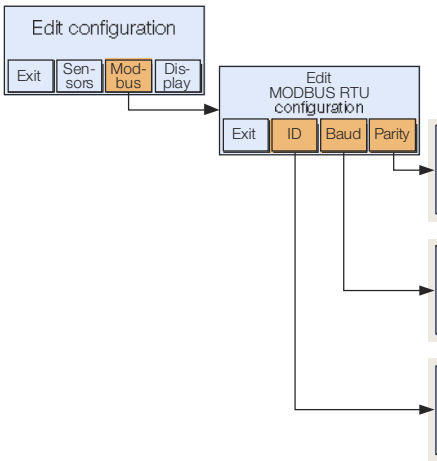

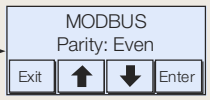

Setting of MODBUS data format (parity).
Press ⬇ or ⬆ to change between odd, even and none parity.

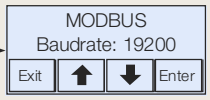

Setting of MODBUS data rate.
Press ⬇ or ⬆ to change between baudrates.

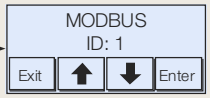

Setting of Control Unit's MODBUS ID

Display configuration

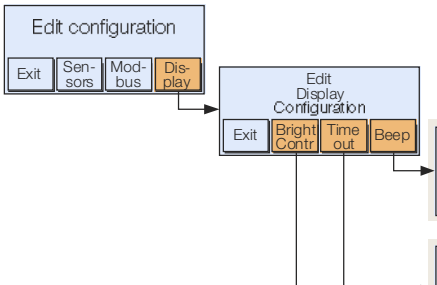

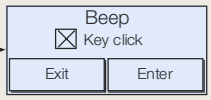

Switch signal and touch tones on or off

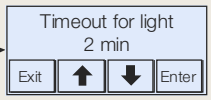

Settings for timeout of lighting of background and sensor LEDs

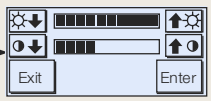

Settings for brightness and contrast of display

Measurement functions

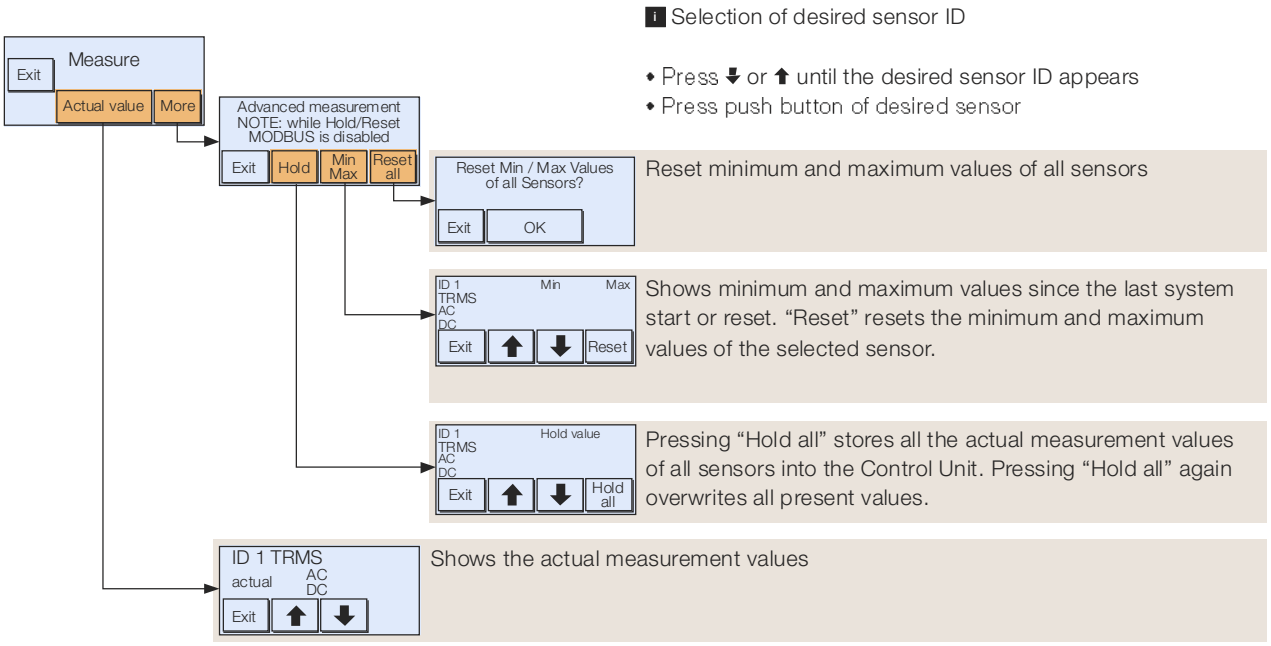

MODBUS communication protocol

Introducing MODBUS protocol

The MODBUS serial line protocol is a Master-Slaves protocol. This means that only one master is connected to the bus, and one or several (247 maximum number) slaves nodes are also connected to the same serial bus. A MODBUS communication is always initiated by the master and there is only one transaction at the same time.

Further information: www.modbus.org

MODBUS frame description (RTU mode)

ADU frame			
Adress	PDU frame		Error check
Adress field	**Function code**	**Data**	**CRC**
1 byte	1 byte	0 bis 252 byte(s)	2 bytes CRC_L, CRC_H

ADU: Application Data Unit
PDU: Protocol Data Unit

Address field:	contains the slave address
Function code:	indicates what kind of action to perform
Data:	contains request and response parameters
CRC:	contains the value, generated by cyclic redundancy check (standard CRC-16 defined by CCITT)

The maximum size of a MODBUS RTU frame is 256 bytes.

NOTE:
– In RTU mode, message frames are separated by a silent interval of at least 3.5 character times
– The entire message frame must be transmitted as a continuous stream of characters
– If a silent interval of more than 1.5 character times occurs between two characters, the message frame is declared incomplete and should be discarded by the receiver

MODBUS data encoding

MODBUS uses a big endian allocation for addresses and data items. This means, when a numerical quantity larger than a single byte is transmitted, the most significant byte is sent first.
Example: 1234h ⇝ first 12h then 34h

Communication to CMS

Physical interface RS-485

To communicate with the CMS by an upper system all devices (masters & slaves) must have the same data rate and data format.
These settings are done over the Control Unit's touch display, as described in chapter "MODBUS configuration".

Parameter	Values	Default values
Data rate	2400, 4800, 9600, 19200, 38400, 57600, 115200 Bit/s	19200 Bit/s
Data format	even parity, odd parity, without parity	even parity

Line termination: external, if necessary

Control Unit's MODBUS-ID

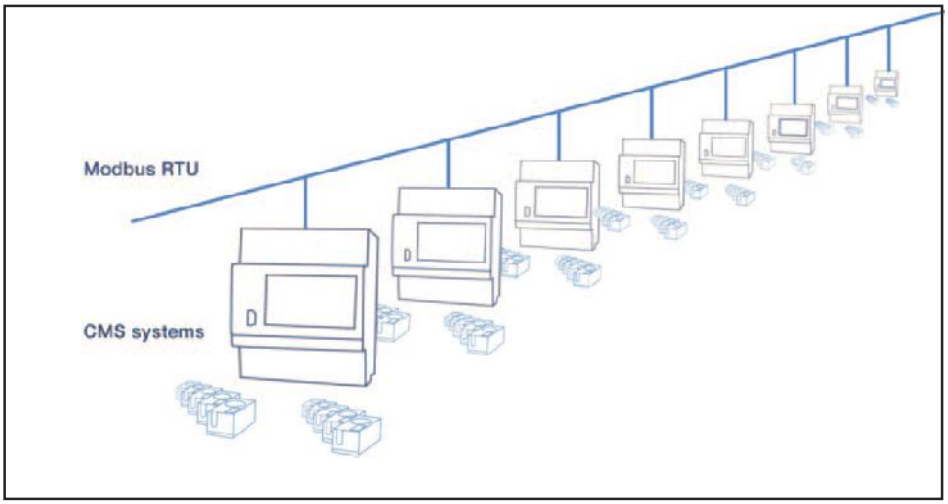

It is possible to connect up to 247 Control Units to one MODBUS RTU line. Each Control Unit must have an unique MODBUS ID (address), according the description in the chapter "MODBUS configuration".

These IDs can be set over the Control Unit's touch display.

Default ID (address): 1

Function code

- Read operation on registers with access code "R" or "RW" is defined by function **03h «Read Holding Registers»**
- Write operation on registers with access code "W" or "RW" is defined by function **06h «Write Single Register»**

Other than the specified functions must not be applied.

Data and control registers

A register is always a two-byte (16-bit) value, which can be interpreted as either signed or unsigned values, or which have special format.
In case of data represented in more than one register the concatenated registers will contain information with MSB in lowest address and LSB in highest address within concatenated addresses.

Other than the specified registers must not be used.

Remark 1: format

unsigned = 16-bit unsigned integer notation, resolution 0.01 A
signed = 16-bit signed integer notation, resolution 0.01 A
0000h ... 7FEFh = 0.00 ... 327.51 A
8000h ... FFFFh = –327.66 ... –0.01 A
Values with special meanings:

Special values	Meaning
7FF0h	Data pending, acquisition in progress
7FF1h ... 7FFBh	Reserved
7FFCh	The sensor is known but not accessible at the moment
7FFDh	Data type TrueRMS/AC/DC is disabled
7FFEh	Overload (beyond full range)
7FFFh	Forbidden (no Sensor with ID xx)

bit mask = bit-wise operation
special = as specified at register description

Remark 2 access

R (03) = Register can read by function 03
W (06) = Register can be written by function 06

Ongoing measurement values

These registers contain the actual measured data.

Adress (hex)	Words (16bit)	Description	Resolu-tion and unit	Format [1]	Access [2]
0000	1	TrueRMS Wert of SENSOR 1	0.01 A	unsigned	R (03)
0001	1	TrueRMS Wert of SENSOR 2	0.01 A	unsigned	R (03)
…	1	…	0.01 A	unsigned	R (03)
003E	1	TrueRMS Wert of SENSOR 63	0.01 A	unsigned	R (03)
003F	1	TrueRMS Wert of SENSOR 64	0.01 A	unsigned	R (03)
0100	1	AC value of Sensor 1	0.01 A	unsigned	R (03)
0101	1	AC value of Sensor 2	0.01 A	unsigned	R (03)
…	1	…	0.01 A	unsigned	R (03)
013E	1	AC value of Sensor 63	0.01 A	unsigned	R (03)
013F	1	AC value of Sensor 64	0.01 A	unsigned	R (03)
0200	1	DC value of Sensor 1	0.01 A	signed	R (03)
0201	1	DC value of Sensor 2	0.01 A	signed	R (03)
…	1	…	0.01 A	signed	R (03)
023E	1	DC value of Sensor 63	0.01 A	signed	R (03)
023F	1	DC value of Sensor 64	0.01 A	signed	R (03)

Measured minimal values

These registers contain the minimal measured values since last system start/reset or since last request “reset min/max values”.

Adress (hex)	Words (16bit)	Description	Resolu-tion and unit	Format [1]	Access [2]
0400	1	TrueRMS min value of Sensor 1	0.01 A	unsigned	R (03)
0401	1	TrueRMS min value of Sensor 2	0.01 A	unsigned	R (03)
…	1	…	0.01 A	unsigned	R (03)
043E	1	TrueRMS min value of Sensor 63	0.01 A	unsigned	R (03)
043F	1	TrueRMS min value of Sensor 64	0.01 A	unsigned	R (03)
0500	1	AC min value of Sensor 1	0.01 A	unsigned	R (03)
0501	1	AC min value of Sensor 2	0.01 A	unsigned	R (03)
…	1	…	0.01 A	unsigned	R (03)
053E	1	AC min value of Sensor 63	0.01 A	unsigned	R (03)
053F	1	AC min value of Sensor 64	0.01 A	unsigned	R (03)
0600	1	DC min value of Sensor 1	0.01 A	signed	R (03)
0601	1	DC min value of Sensor 2	0.01 A	signed	R (03)
…	1	…	0.01 A	signed	R (03)
063E	1	DC min value of Sensor 63	0.01 A	signed	R (03)
063F	1	DC min value of Sensor 64	0.01 A	signed	R (03)

Measured maximal values

These registers contain the maximal measured values since last system start / reset or since last request “reset min/max values”.

Adress (hex)	Words (16bit)	Description	Resolu-tion and unit	Format [1]	Access [2]
0800	1	TrueRMS max value of Sensor 1	0.01 A	unsigned	R (03)
0801	1	TrueRMS max value of Sensor 2	0.01 A	unsigned	R (03)
…	1	…	0.01 A	unsigned	R (03)
083E	1	TrueRMS max value of Sensor 63	0.01 A	unsigned	R (03)
083F	1	TrueRMS max value of Sensor 64	0.01 A	unsigned	R (03)

0900	1	AC max value of Sensor 1	0.01 A	unsigned	R (03)
0901	1	AC max value of Sensor 2	0.01 A	unsigned	R (03)
…	1	…	0.01 A	unsigned	R (03)
093E	1	AC max value of Sensor 63	0.01 A	unsigned	R (03)
093F	1	AC max value of Sensor 64	0.01 A	unsigned	R (03)

0A00	1	DC max value of Sensor 1	0.01 A	signed	R (03)
0A01	1	DC max value of Sensor 2	0.01 A	signed	R (03)
…	1	…	0.01 A	signed	R (03)
0A3E	1	DC max value of Sensor 63	0.01 A	signed	R (03)
0A3F	1	DC max value of Sensor 64	0.01 A	signed	R (03)

Measured hold values

These registers contain the hold values captured at a time given by request “trigger hold measurement”.

Adress (hex)	Words (16bit)	Description	Resolu-tion and unit	Format [1]	Access [2]
0C00	1	TrueRMS hold value of Sensor 1	0.01 A	unsigned	R (03)
0C01	1	TrueRMS hold value of Sensor 2	0.01 A	unsigned	R (03)
…	1	…	0.01 A	unsigned	R (03)
0C3E	1	TrueRMS hold value of Sensor 63	0.01 A	unsigned	R (03)
0C3F	1	TrueRMS hold value of Sensor 64	0.01 A	unsigned	R (03)

0D00	1	AC hold value of Sensor 1	0.01 A	unsigned	R (03)
0D01	1	AC hold value of Sensor 2	0.01 A	unsigned	R (03)
…	1	…	0.01 A	unsigned	R (03)
0D3E	1	AC hold value of Sensor 63	0.01 A	unsigned	R (03)
0D3F	1	AC hold value of Sensor 64	0.01 A	unsigned	R (03)

0E00	1	DC hold value of Sensor 1	0.01 A	signed	R (03)
0E01	1	DC hold value of Sensor 2	0.01 A	signed	R (03)
…	1	…	0.01 A	signed	R (03)
0E3E	1	DC hold value of Sensor 63	0.01 A	signed	R (03)
0E3F	1	DC hold value of Sensor 64	0.01 A	signed	R (03)

Trigger hold, reset min and max values

Write operation on this register
- triggers the hold measurement of all sensors, and/or
- resets the minimal and maximal values of all sensors

Adress (hex)	Words (16bit)	Description	Resolu-tion and unit	Format [1]	Access [2]
3010	1	Trigger hold, reset min and max values		bit mask	W (06)

The commands have the following bit format position:

0000 0000 000T 000R

- T 1 = Trigger hold measurement
- R 1 = Reset min and max values

Command will be acknowledged by response message on MODBUS and by a short display message.

Example: 0010h means "Trigger hold measurement"

Show Sensor

Write operation on this register starts or stops fast LED blinking of one specified Sensor for diagnosis purpose.

Adress (hex)	Words (16bit)	Description	Resolu-tion and unit	Format [1]	Access [2]
3011	1	Show Sensor		special	W (06)

Start / stop command is in the following bit format position:

000S 0000 0CCC CCCC

- C Sensor ID
- S 0 = stop fast LED blinking
  1 = start fast LED blinking

Data written has to specify a known Sensor ID.
Touch display is locked while showing Sensor, unlocked by stop blinking.

Example: 0x1017 means “Start fast LED blinking of Sensor with ID 23”

- When Sensor is addressed correctly, common response will follow
- When Sensor ID is not used in system, exception response with MODBUS exception code 03h “illegal data value” will follow.
  (If the fast LED blinking was active before, it will be stopped and Touch Display will be unlocked.)

Return to normal display content is possible by sending the stop command.

Error codes

MODBUS protocol defines a common way of error reporting. Every request (read or write) sent in unicast mode is expected to return a value in packet of the same structure. In case of error in handing message (not CRC problems but message execution problems), generated response contains function code with MSB set (80h) and single byte representing error code, called “exception code”.

The following default exception codes are provided:

Code	Name	Description
01h	Illegal function	Function is not supported
02h	Illegal data address	Register address is out of Control Unit’s range, or trying to write into a read only register
03h	Illegal data value	Value is out of range
04h	Slave device failure	Unrecoverable error occurred while Control Unit was attempting to perform the requested action, e.g. time-out
06h	Slave device busy	Control Unit is currently in User-Interface-Configuration-Mode. The requested action is not possible.

Examples

To introduce basics of the communication scheme, the most common use cases are described.
Note: The described use cases do not cover all possibilities but only shows example communication schemes

Read ongoing measurement values of Sensor 5-16

	frames	comment	
M→S	D	MBID address of Control Unit	
	03h	Function code	(Read Holding Registers)
	00h, 04h	Starting address	(TrueRMS value of Sensor 5)
	00h, 0Ch	Quantity of registers	(12)
	CRC_L, CRC_H	CRC	
S→M	ID	MBID address of Control Unit	
	03h	Function code	(Read Holding Registers)
	18h	Quantity of bytes	(24)
	$VALUE_H$, $VALUE_L$	Register value	(TrueRMS value of Sensor 5)
	$VALUE_H$, $VALUE_L$	Register value	(TrueRMS value of Sensor 6)
	$VALUE_H$, $VALUE_L$	Register value	(TrueRMS value of Sensor 7)
	$VALUE_H$, $VALUE_L$	Register value	(TrueRMS value of Sensor 8)
	$VALUE_H$, $VALUE_L$	Register value	(TrueRMS value of Sensor 9)
	$VALUE_H$, $VALUE_L$	Register value	(TrueRMS value of Sensor10)
	$VALUE_H$, $VALUE_L$	Register value	(TrueRMS value of Sensor11)
	$VALUE_H$, $VALUE_L$	Register value	(TrueRMS value of Sensor12)
	$VALUE_H$, $VALUE_L$	Register value	(TrueRMS value of Sensor13)
	$VALUE_H$, $VALUE_L$	Register value	(TrueRMS value of Sensor14)
	$VALUE_H$, $VALUE_L$	Register value	(TrueRMS value of Sensor15)
	$VALUE_H$, $VALUE_L$	Register value	(TrueRMS value of Sensor16)
	CRC_L, CRC_H	CRC	

Trigger hold function of all Sensors

	frames	comment	
M→S	ID	MBID address of Control Unit	
	06h	Function code	(Write Single Register)
	30h, 10h	Register address	(Trigger hold, reset min/max)
	00h, 10h	Register value	(Trigger hold)
	CRC_L, CRC_H	CRC	
S→M	ID	MBID address of Control Unit	
	06h	Function code	(Write Single Register)
	30h, 10h	Register address	(Trigger hold, reset min/max)
	00h, 10h	Register value	(Trigger hold)
	CRC_L, CRC_H	CRC	

Technical data

Sensors 18 mm				
Sensor type		**CMS-100xx**	**CMS-101xx**	**CMS-102xx**
Measurement range	[A]	80	40	20
Measurement method		TRMS, AC 50/60 Hz, DC	TRMS, AC 50/60 Hz, DC	TRMS, AC 50/60 Hz, DC
Crest factor of distorted wave forms		≤1.5	≤3	≤6
AC Accuracy (TA = +25 °C)*		≤ ± 0.5 %	≤ ± 0.5 %	≤ ± 0.5 %
AC Temperature coefficient*		≤ ± 0.036 %	≤ ± 0.036 %	≤ ± 0.036 %
DC Accuracy (TA = +25 °C)*		≤ ± 0.7 %	≤ ± 1.0 %	≤ ± 1.7 %
DC Temperature coefficient*		≤ ± 0.047 %	≤ ± 0.059 %	≤ ± 0.084 %
Resolution	[A]	0.01	0.01	0.01
Sampling rate internal	[Hz]	5000	5000	5000
Settling time (±1%)	[sec]	typ. 0.25	typ. 0.25	typ. 0.25
Cable feed through	[mm]	10	10	10
Insulation voltage	[V]	690 VAC/1500 VDC	690 VAC/1500 VDC	690 VAC/1500 VDC
Dimensions				
CMS-100PS series	[mm]	17.4 x 41.0 x 26.5	17.4 x 41.0 x 26.5	17.4 x 41.0 x 26.5
CMS-100S8 series	[mm]	26.5 x 45.5 x 31.8	26.5 x 45.5 x 31.8	26.5 x 45.5 x 31.8
CMS-100DR series	[mm]	17.4 x 51.5 x 43.2	17.4 x 51.5 x 43.2	17.4 x 51.5 x 43.2
CMS-100CA series	[mm]	17.4 x 41.0 x 29.0	17.4 x 41.0 x 29.0	17.4 x 41.0 x 29.0

Sensors 25 mm				
Sensor type		**CMS-200xx**	**CMS-201xx**	**CMS-202xx**
Measurement range	[A]	160	80	40
Measurement method		TRMS, AC 50/60 Hz, DC	TRMS, AC 50/60 Hz, DC	TRMS, AC 50/60 Hz, DC
Crest factor of distorted wave forms		≤1.5	≤3	≤6
AC Accuracy (TA = +25 °C)*		≤ ± 0.5 %	≤ ± 0.5 %	≤ ± 0.5 %
AC Temperature coefficient*		≤ ± 0.036 %	≤ ± 0.036 %	≤ ± 0.036 %
DC Accuracy (TA = +25 °C)*		≤ ± 0.7 %	≤ ± 1.0 %	≤ ± 1.7 %
DC Temperature coefficient*		≤ ± 0.047 %	≤ ± 0.059 %	≤ ± 0.084 %
Resolution	[A]	0.01	0.01	0.01
Sampling rate internal	[Hz]	5000	5000	5000
Settling time (±1%)	[sec]	typ. 0.25	typ. 0.25	typ. 0.25
Cable feed through	[mm]	15	15	15
Insulation voltage	[V]	690 VAC/1500 VDC	690 VAC/1500 VDC	690 VAC/1500 VDC
Dimensions				
CMS-200S8 series	[mm]	26.5 x 43.0 x 38.5	26.5 x 43.0 x 38.5	26.5 x 43.0 x 38.5
CMS-200DR series	[mm]	25.4 x 43.0 x 43.2	25.4 x 43.0 x 43.2	25.4 x 43.0 x 43.2
CMS-200CA series	[mm]	25.4 x 43.0 x 35.7	25.4 x 43.0 x 35.7	25.4 x 43.0 x 35.7

* All accuracy values refer to full range

General Data	Sensors and Control Unit
Operating temperature	–25 °C .. +70 °C
Storage temperature	–40 °C .. +85 °C
Shock resistance	5 g, 6 shocks, duration 30 ms, acc. IEC 60068-2-27 Ea
Vibration resistance	1 g, 20 cyclus, 5…150…5 Hz, acc. IEC 60068-2-6 Fc
Overvoltage category	Cat. II, acc. EN 50178
Pollution degree	Class 3 – U_i 690 V AC / Class 2 – U_i 1500 V DC, acc. EN 50178
Environment class	Type B, acc. EN 50178, 6.1
Rated impulse withstand capability	4 kV, acc. EN 50178
Electrostatic discharge (ESD)	8 kV air discharge, 6 kV contact discharge, acc. IEC/EN 61000-4-2, crit. b
EMC	IEC/EN 61000-4-3, -4-4, -4-5, -4-6, -6-3, -6.4
Immunity to radiated electromagnetic fields (RFI	10 V/m, acc. IEC/EN 61000-4-3, crit. a
Immunity to fast transient burst	4 kV power cables, 2 kV signal cables, acc. IEC/EN 61000-4-4, crit. b
Immunity to high-energy pulses (surge)	0.5 kV DC power cable line-to-earth, 0.5 kV DC power cable line-to-line, 2 kV signal cable line-to-earth, 1 kV signal cable line-to-line, acc. IEC/EN 61000-4-5, crit. b
Immunity to line-conducted interference	10 V, acc. IEC/EN 61000-4-6, crit. b
Emission	acc. IEC/EN 61000-6-3 and IEC/EN 61000-6-4

* of full scale

FAQ

It can happen, that the CMS-system deviates from the expected state. Read the following special note, which should help you to identify possible problems.

Behavior	Explanation	Remedy
Touch display of Control Unit does not show anything	Power supply is interrupted	Check the power supply, turn on the power supply
The touch display of the Control Unit does not react on inputs	Entry is not recognized	Press harder
	Dirtiness	Cleaning of the hand/ display
	Devices is stuck in an infinite loop	Reset system by interrupting the power supply
Sensor LED remains dark	CMS-Bus connection is interrupted	Check the flat cable and connection
	Power supply of the CMS system is interrupted	Check the power supply of the Control Unit
	System is in “Time out for light”	Touch the display, if desired increase the “Time out for light”
Sensor LED lights up continuously	Normal function of a registered sensor	If desired, decrease the “Time out for light”
Sensor LED blinks slowly	Normal function of an unregistered sensor	If desired, add sensor
Sensor LED blinks fast	Normal function of a selected sensor	If desired, select another sensor
Sensor LEDs and the illumination of touch display turn off too early/too late/never	“Time out for light” was not configured appropriately	Configure the parameter “Edit Display Time out”
Sensor does not react on pressure on push button	The input is not recognized	Press harder
	Unexpected input, sensor selection is not allowed	Use a function of the Control Unit, which is allowed for sensor selection
	CMS-Bus connection of the sensor is interrupted	Check flat cable and connection
	Power supply of the CMS system is interrupted	Check the power supply of the Control Unit
Adding a sensor is not possible	The maximum amount of 32 sensors for CMS-Bus line is reached	Connect maximum 32 sensors to each busline
	Pressure on the push button is not recognized	Push harder
	CMS-Bus connection of the sensor is interrupted	Check flat cable and connections
	Power supply of the CMS system is interrupted	Check power supply of Control Unit
DC value of a sensor is shown with an incorrect polarity	DC polarity does not correspond to the desired current direction	Change DC polarity via Control Unit
No MODBUS function	Cable connection is broken	Check the bus cabling
	False address	Check MODBUS ID of Control Unit
	Incorrect communications parameters	Check MODBUS baudrate and parity settings
	Incorrect communication protocol	Use MODBUS RTU protocol
	Reflections in the bus cable for bus length	Use external line termination (resistor)
No USB function	USB interface is currently only for firmware update	Do Data connection via MODBUS terminals

Technical drawings

Sensor CMS-100PS series

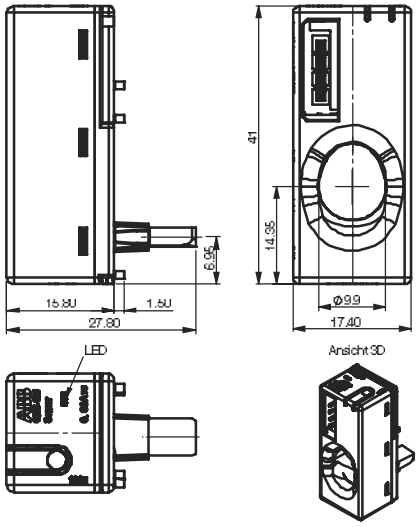

Sensor CMS-100S8 series

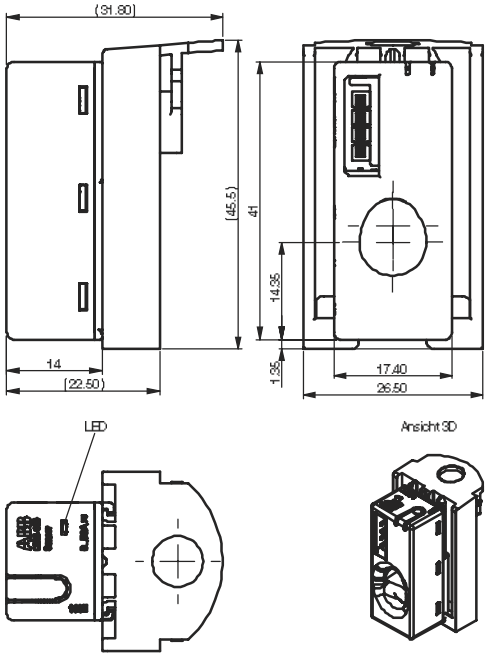

Sensor CMS-100DR series

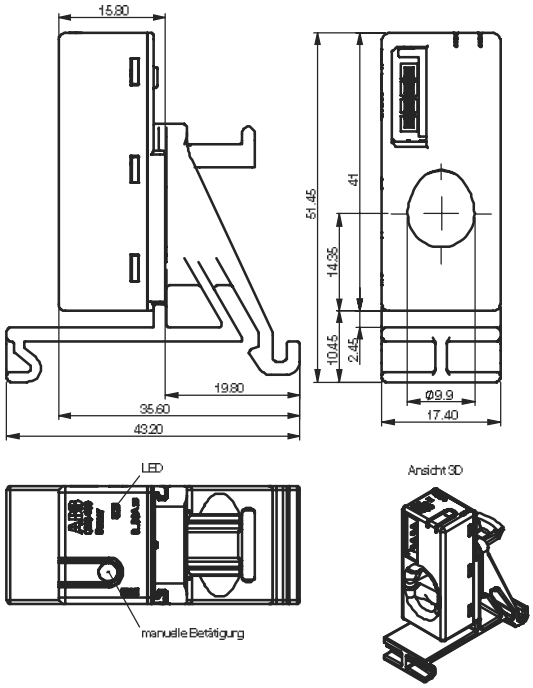

Sensor CMS-100CA series

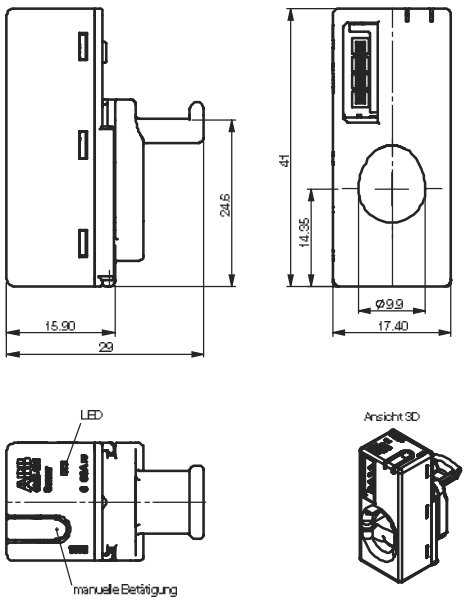

Sensor CMS-200DR series

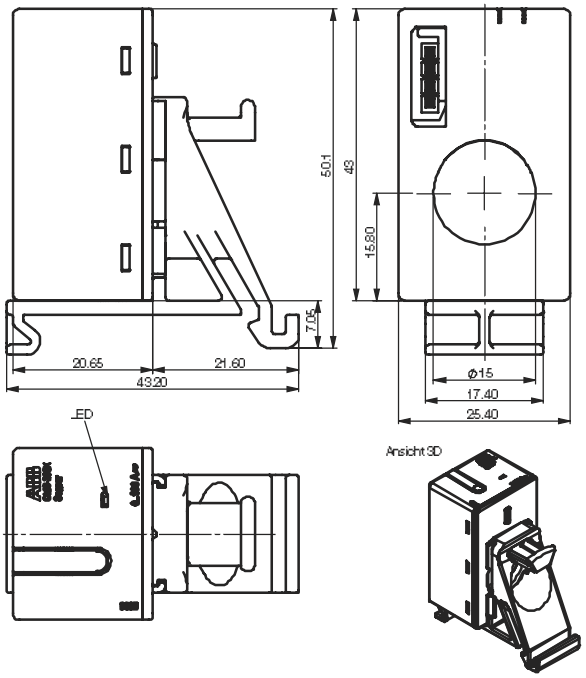

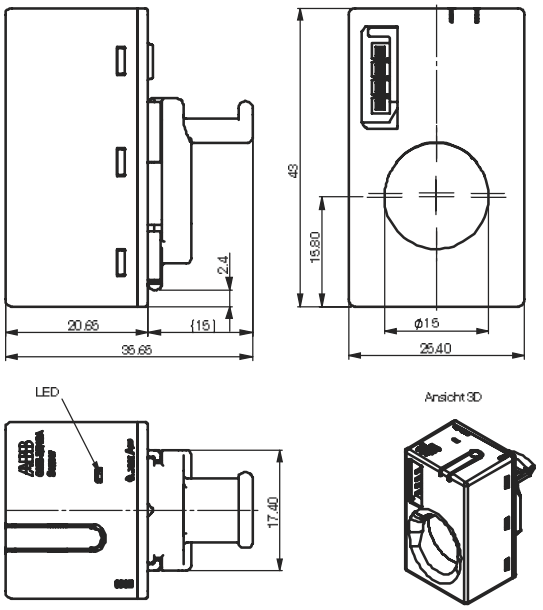

Sensor CMS-200S8 series

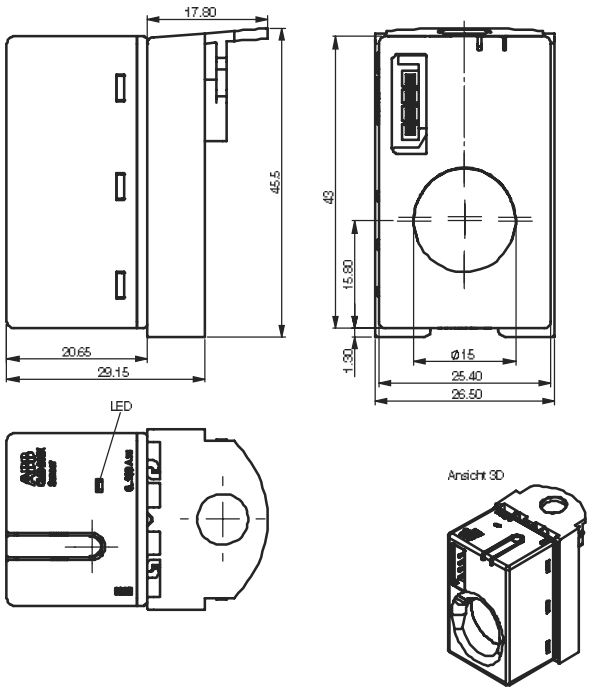

Control Unit CMS-600

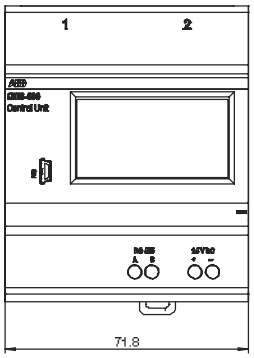

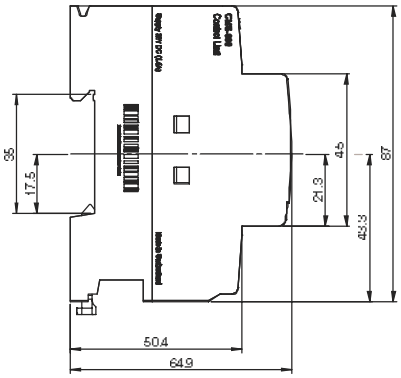

3D Ansicht

